LISBON AVENUE CULVERT REPLACEMENT

PROJECT NUMBER: FS1976

CITY OF RIO RANCHO
SANDOVAL COUNTY, NEW MEXICO

CONSTRUCTION PLANS

PROJECT LOCATION

SHEET INDEX:

1 TITLE SHEET
2 GENERAL NOTES
3 ABBREVIATIONS AND LEGEND
4 TOPOGRAPHIC SURVEY
5 PROJECT CONTROL PLAN
6 REMOVAL PLAN
7 CHANNEL PLAN AND PROFILE STA. 8+50 TO STA. 9+70
8 CBC AND CHANNEL PLAN AND PROFILE STA. 9+70 TO STA. 11+30
9 LISBON AVENUE GRADING AND PAVING PLAN
10 LISBON AVENUE UTILITY PLAN AND PROFILE
11 PLAN AND LONGITUDINAL PROFILE
12 STRUCTURAL SECTIONS
12A END OF NMDOT CBC SECTIONS AND DETAILS
13 TRAPEZOIDAL CHANNEL DETAILS
14 SSCAFCA STANDARD MAINTENANCE ACCESS GATE DETAIL
15 PIPE RAIL DETAILS
16 ROADWAY DETAILS
17 ROADWAY DETAILS
18 ROADWAY DETAILS
19 UTILITY DETAILS
19A UTILITY DETAILS
20 NMDOT STD DWG 511-62-1/2
21 NMDOT STD DWG 511-62-2/2
22 NMDOT STD DWG 511-66-1/6
23 NMDOT STD DWG 511-66-2/6

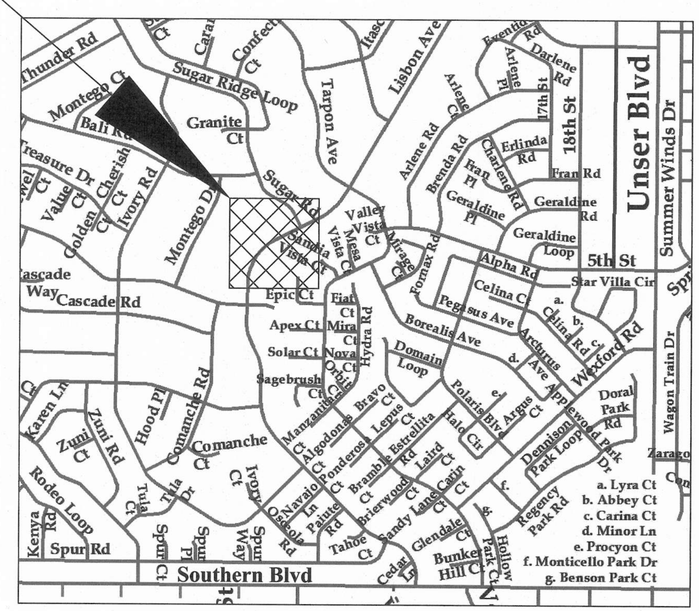

VICINITY MAP NOT TO SCALE

CITY OF RIO RANCHO: _____ DATE: 9/4/19
DEPARTMENT OF PUBLIC WORKS
ENGINEERING DIVISION

SSCAFCA: _____ DATE: 9/4/19
EXECUTIVE ENGINEER

nm811 Know what's below. Call before you dig.

No.	DESCRIPTION	DATE	BY
1			
2			
3			
4			
5			
6			
7			

REVISIONS (OR CHANGE NOTICES)

Designed By: CONLEY ENGINEERING LLC 3915 Carlisle Blvd NE Albuquerque, NM 87107 505-331-1587

Designed For: CITY OF RIO RANCHO NEW MEXICO

LISBON AVENUE CULVERT REPLACEMENT

TITLE SHEET

LICENSED PROFESSIONAL ENGINEER PATRICK J. CONLEY NEW MEXICO 10141 9/4/2019

PROJECT NO. FS1976
DESIGNED BY: PJC
DRAWN BY: CE LLC
CHECKED BY: PJC
DATE MODIFIED:
DPW CHK:
SHEET: 1

GENERAL NOTES

1. All construction shall be performed in accordance with 1) the project construction plans, 2) the project specifications, 3) the current edition of the City of Rio Rancho standard details, 4) the current edition of the NMDOT Standard Specifications for Highway and Bridge Construction, and 5) the New Mexico Standard Specifications for Public Works Construction and details, as prepared by the New Mexico Chapter, American Public Works Association and addendum. In the case of conflicting specifications, the City of Rio Rancho will determine which specification governs.

2. The Contractor agrees to assume the sole and complete responsibility for the job site conditions during the course of construction of the project, including safety of all persons and property. This requirement shall apply continuously and not be limited to normal working hours, and the Contractor shall defend, indemnify and hold the City and Engineer harmless from any and all liability, real or alleged, in connection with the performance of the work on this project, except for liability arising from the sole negligence of the City or Engineer.

3. No modifications to these plans shall be made without the written consent of the City, Engineer, and all approval signatories. The Engineer shall not be responsible for construction methods or techniques or for the prosecution of the work as shown on these plans. The Engineer shall not be held responsible for the acts or omissions of the Contractor, Subcontractors, or other persons performing any work, as shown in the project Contract Documents.

4. A Right-of-Way Use Permit and Traffic Control Plan (TCP) are required for all work performed within the public Right-of-Way. Provisions contained within Chapter 96 of the City of Rio Rancho Municipal Code shall govern. All construction signing, barricading, and channelization devices shall conform to the latest edition of the Manual on Uniform Traffic Control Devices (MUTCD). The Contractor is responsible for the setup and maintenance of all traffic control devices. Any modifications to the approved traffic control plan must by approved by the City prior to any changes being implemented. A Traffic Control Supervisor must be available for the duration of the project 24 hours a day and seven days a week. Access to residents and businesses must be maintained at all times.

5. The Contractor shall designate at least one emergency contact person, and shall provide telephone numbers where this person can be contacted at any time. This information shall be provided to the City's Project Manager.

6. The Contractor is responsible for obtaining all necessary permits from all jurisdictional authorities before the start of construction.

7. All work on this project shall be performed in accordance with applicable federal, state, and local laws, rules and regulations concerning construction safety, health, and environmental protection.

8. Existing site improvements which are damaged or displaced by the Contractor shall be removed and replaced by the Contractor at the Contractor's own expense. The work shall be approved by the City before construction of the repairs. Repairs must be accepted by the City before final payment.

9. The Contractor shall only utilize the designated staging areas for storage of all equipment and materials. The City assumes no responsibility or liability for the Contractor's equipment and material in the staging area. Security shall be the sole responsibility of the Contractor. If no staging area is designated on these plans, an offsite staging area shall be provided by the Contractor at the Contractor's expense, or the Contractor may negotiate with the City to use an onsite area.

10. Unless otherwise noted, all roadway stationing is along the centerline of the roadway right-of-way.

11. Unless otherwise noted, stationing of channels and/or pipes in drainage easements is along the centerline of the channel/pipe.

12. The Contractor shall be responsible for determining, in advance of their construction operations, if overhead utility lines, support structures, poles, guys, etc., are an obstruction to construction operations. If any obstruction is evident, the Contractor shall be responsible for coordinating with the appropriate utility owner to remove or support the utility obstruction. All costs for these requirements are incidental to the Contract.

13. Facilities which are not specifically located with actual vertical and horizontal controls on the construction documents, are shown approximate and in accordance with the best available information provided by various owners of the facilities, and supplemented by visual surface information where appropriate. Accuracy, location, and completeness of this information is the sole responsibility of the Contractor and should be verified, by any means necessary, before the initiation of construction. Should a conflict exist, the Contractor shall notify the City, Engineer, and the City's Project Manager immediately.

14. It is mandatory that a preconstruction meeting be held before commencing construction. The Contractor is responsible for contacting the City's Project Manager to determine the time and location of the preconstruction meeting.

15. At the preconstruction meeting, the Contractor shall submit a detailed construction schedule to the City's Project Manager. The schedule will be updated on a monthly basis and submitted with the monthly invoice.

16. Any work performed without the approval of the City of Rio Rancho and/or all work and materials not in conformance with the specifications is subject to removal and replacement at the Contractor's expense.

17. The Contractor shall contact NM 811 at 1-800-321-2537 for utility spots in accordance with applicable state law.

18. The Contractor shall confine their work to within the construction limits and/or public right-of-way to preserve existing vegetation, landscaping, and private property. Approval of these plans does not give or imply any permission to trespass or work on private property. Permission must be granted in writing by the Owner of that property.

19. It is the sole responsibility of the Contractor to keep the job site free from trash on a daily basis, and all materials will be neatly organized. Trash and/or non-used materials shall not be buried onsite.

20. The Contractor shall park equipment and vehicles so as not to interfere with normal activities of residents, other Contractors, or Emergency Services.

21. The Contractor will provide construction staking utilizing approved construction plans, the appropriate Right-of-Way maps, recorded plats, and City of Rio Rancho standard details. Each revision to the plans shall be recorded in the plan revision block. Plans shall include a location map with legal description(s) and location grid.

22. The Contractor shall maintain an up-to-date and accurate set of Working Record Drawings, redlined drawings, in accordance with the City or Rio Rancho's Development Process Manual (DPM) Chapter II.7. These Working Record Drawings shall reflect all approved changes to the original plans throughout the construction process. At the completion of construction, the Contractor shall submit the Working Record Drawings as outlined in the City or Rio Rancho's DPM Chapter II.7. Also, the Contractor shall ensure that all submittals, permitting, and construction activities are in accordance with the City or Rio Rancho's DPM and applicable ordinances. All costs for these requirements are incidental to the Contract.

23. No work shall be performed in a floodplain without written authorization from the City's Floodplain Manager.

24. Any work performed in a drainage way, channel, arroyo, or floodplain must be protected by the means identified in the Temporary Erosion Control and Sediment plans accepted by the City.

25. Vibration monitoring will be at the Contractor's discretion and incidental to the Contract.

SOILS

1. Unless otherwise specified subgrade soils and structural fill materials shall be compacted to the following percentages of the ASTM D-1557 maximum density.

MATERIALS	PERCENT (%) COMPACTION
STRUCTURAL FILL IN THE BUILDING AREA	95
SUB BASE FOR SLAB SUPPORT	95
MISCELLANEOUS BACKFILL BELOW STRUCTURAL FILL OR ROAD	95
MISCELLANEOUS BACKFILL BELOW UNPAVED, NON-BUILDING AREAS	90
ROAD SUB GRADE	95
SIDEWALK SUB GRADE	95
CURB AND GUTTER SUBGRADE	95
ARROYOS	90

ROADWAY GENERAL NOTES

1. No paving construction activities shall be started until all underground utilities within the roadway are completed, tested, and approved. All water valve boxes and electrical, telephone, television, and sewer manholes in the construction area shall be adjusted to finished grade.

2. All signs, barricades, channelization devices, pavement markings, sign frames and erection of such devices shall conform to the requirements of the "Manual on Uniform Traffic Control Devices for streets and highways" (MUTCD), current edition.

3. All street striping altered or destroyed during construction shall be replaced by the Contractor to match the original conditions (i.e. type, spacing) at the location prior to construction, or as shown in this plan set.

4. Street grades shall be restored by the Contractor to the existing grades unless otherwise directed by the City of Rio Rancho. Smooth transitions shall be made between existing pavement which remains in place and pavement which is replaced. When abutting new pavement to existing, saw cut back existing pavement to a neat, straight line as required to remove any broken or cracked pavement. Refer to standard drawing PS-02.

5. The location of all valves and manholes must be referenced at all times by the Contractor during construction and made accessible daily upon completion of all paving activities.

EROSION CONTROL/ENVIRONMENTAL PROTECTION/STORM WATER POLLUTION PREVENTION PLAN

1. The Contractor shall be responsible for fulfilling all necessary National Pollutant Discharge Elimination System (NPDES) requirements including, but not limited to, obtaining an NPDES permit before construction, filling out the Notice of Intent (NOI) application, and filling out the Notice of Termination (NOT) application. The Contractor shall also be responsible for the implementation of and inspection reports for the Storm Water Pollution Prevention Plan (SWPPP). The Contractor shall submit the SWPPP with the proposed construction staging area and temporary sanitary facilities clearly shown. Any check dams, silt fences, or other Best Management Practices (BMP) that are required in the approved SWPPP shall be included in and are incidental to the SWPPP bid amount.

2. The Contractor is required to keep a current copy of the SWPPP at the construction site or at an easily accessible location so that it can be made available at the time of an onsite inspection or upon request by the EPA; a state, tribal, or local agency approving storm water management plans; the operator of a storm sewer system receiving discharges from the site; or representatives of the U.S. Fish and Wildlife Service (USFWS) or the National Marine Fisheries Service (NMFS).

3. The Contractor shall conform to all City, County, State and Federal dust and erosion control regulations. The Contractor shall prepare and obtain any necessary dust or erosion control permits from the regulatory agencies.

4. The Contractor shall either promptly remove any material excavated within the public Right-of-Way or install BMPs according to NPDES requirements to prevent discharge of excavated material within the public Right-of-Way during a rain or wind event. All costs for these requirements are incidental to the Contract.

5. The Contractor shall implement the approved SWPPP and ensure that no soil erodes from the site into public Right-of-Way or onto private property.

6. The Contractor shall mitigate erosion of temporary or permanent dirt swales by installing BMPs identified in the approved SWPPP in the swales perpendicular to the direction of flow, and at intervals as specified in the SWPPP.

7. Construction areas shall be watered for dust control in compliance with government ordinances. The Contractor shall be responsible for locating and supplying water as required. Watering, as required for construction and dust control, shall be considered incidental to construction and no measurement or payment shall be made therefore.

8. Any areas disturbed by construction and not covered by landscaping or an impervious surface shall be re-vegetated with native grass seeding. When construction activities cease and earth disturbing activities will not resume within 14 days, stabilization measures must be initiated. Unless indicated otherwise on these plans or on the landscaping plan, native grass seeding shall be in accordance with Section 1012 of the New Mexico Standard Specifications for Public Works Construction, APWA NM Chapter, current edition.

9. All waste products from the construction site, including items designated for removal, construction waste, construction equipment waste products (oil, gas, tires, etc.) garbage, grubbing, excess cut material, vegetative debris, etc. shall be appropriately disposed of offsite at no additional cost to the City. It shall be the Contractor's responsibility to obtain permits required to haul or dispose of waste products. It shall be the Contractor's responsibility to ensure that the waste disposal site complies with government regulations regarding the environment, endangered species, and archaeological resources.

10. The Contractor shall be responsible for the cleanup and reporting of spills of hazardous materials associated with the construction site. Hazardous materials include gasoline, diesel fuel, motor oil, solvents, chemicals, paints, etc. which may be a threat to the environment. The Contractor shall report the discovery of past or present spills to the New Mexico Environment Department Emergency Response Team at (505) 827-9329.

11. The Contractor shall comply with all applicable regulations concerning surface and underground water. Contact with surface water by construction equipment and personnel shall be minimized. Equipment maintenance and refueling operations shall be performed in an environmentally safe manner in compliance with government regulations.

12. Where storm inlets are susceptible to inflow of silt or debris from construction activities, protection shall be provided on their upstream side utilizing BMPs according to NPDES requirements. All costs for these requirements are incidental to the Contract.

13. Storm Water Pollution Prevention Plans (SWPPP) and accompanying Federal EPA Administrative Procedures shall meet the City of Rio Rancho guidelines and procedures outlined in the current addition of the New Mexico State Highway and Transportation Department Storm Water Management Guidelines for Construction and Industrial Activities Manual.

14. The Contractor shall provide adequate means for cleaning trucks and/or other equipment of mud before entering public streets. It is the Contractor's responsibility to clean streets and take whatever measures are necessary to ensure that all roads are maintained in a clean, mud and dust-free condition at all times.

15. No work may begin in a an arroyo or other drainage way until authorization has been provided by the U.S. Army Corp. of Engineers and the City of Rio Rancho Flood Plain Manager.

WATER GENERAL NOTES

1. For water connections to existing lines, the Contractor shall notify the City's Project Manager a minimum of 48 hours before the connection.

2. Compression joints may be used on copper service lines. Flared joints shall be used when connecting to plastic lines.

3. Valve boxes shall be brought to surface elevation upon completion of the surface course of pavement. Concrete collars shall be constructed to surface elevations.

4. Flushing of water lines shall be metered and reported to the City's Project Manager on a weekly basis. Preference for disposal is (1) on available land surface or (2) in storm sewers. Disposal methods shall be discussed with the City's Project Manager.

5. Flushing, disinfection and testing of water lines shall be coordinated with the City's Project Manager.

6. It will be the Contractor's sole responsibility to protect and maintain, in service, all existing utilities. The Contractor shall adequately support and protect existing utilities affected by the Contractor's trenching activity. In the event that existing utilities are damaged by the Contractor's operations, the Contractor shall arrange for and coordinate prompt repair by the respective utility and shall bear the cost of the repairs.

7. All water lines must have tracer wire and marker balls per City of Rio Rancho standard drawings.

8. The City of Rio Rancho shall approve material submittals before construction.

9. Before any water line installation, the following conditions will occur:

   a) The water line route will be cleared and grubbed and then graded to plan elevation

   b) The water line will be staked when outside an area with curb and gutter.

10. The City of Rio Rancho Utilities Operations Division shall be the only personnel authorized to operate existing valves, fire hydrants, etc. for construction purposes. All shutoffs must be coordinated with the City's Project Manager seven (7) days before proposed shutoff and shall comply with the accepted shutoff plan.

11. The Contractor is responsible for testing of all lines, including but not limited to, hydrostatic and bacteria testing, disinfecting, and flushing.The Contractor is responsible for the testing of the water line system before acceptance by the City. Testing shall be performed to demonstrate the functionality of the system. All costs for these requirements are incidental to the Contract.

12. For non-hot tap water connections to existing lines, the Contractor shall prepare and submit to the City's Project Manager, for acceptance, a water shutoff plan 48 hours before the connection is to take place.

13. The Contractor shall mark the top of the curb with a "W" for water lines following service installations and before final acceptance.

14. Potability testing shall be collected and delivered by a certified third party tester, approved by the City, to a testing laboratory certified by the New Mexico Environment Department - Drinking Water Bureau.

WASTEWATER GENERAL NOTES

1. Sewer/Water lines shall be placed in separate trenches at a distance of 15 feet typically or a minimum of 10 feet apart horizontally. The water line shall be placed a minimum of 1.5 feet higher in elevation than the sewer line. At all crossings of water and sewer lines, the water line shall be a minimum of 1.5 feet higher than the sewer line or the sewer line shall be C-900 pressurized pipe.

2. It will be the Contractor's sole responsibility to protect and maintain in service all existing utilities. The Contractor shall adequately support and protect existing utilities affected by the Contractor's trenching activity. In the event that existing utilities are damaged by the Contractor's operations, the Contractor shall arrange for and coordinate with the Project Manager, prompt repair by the respective utility and shall bear the cost of the repairs.

3. The City of Rio Rancho shall approve material submittals before construction

4. Prior to the sewer line installation, the following conditions will occur:

   a) The sewer line route will be cleared and grubbed and then graded to plan elevation

   b) The sewer line will be staked when outside an area with curb and gutter

5. All forcemain sewer lines must have marker balls per the City of Rio Rancho standard drawings. Tracer wire shall be installed if required by the City's Project Manager.

6. The City of Rio Rancho Utilities Operations Division shall be the only personnel authorized to operate existing valves, etc. for construction purposes. All shutoffs must be coordinated with the City's Project Manager seven (7) days before to proposed shutoff and shall comply with the accepted shutoff plan.

7. 30 days following installation and backfill of sewer lines, a deflection test using a hand pulled mandrel shall be performed in the presence of the City's Inspector. All costs for these requirements are incidental to the Contract.

8. Air testing of sewer lines and hydrostatic testing of force mains shall be conducted in the presence of the City's Inspector. All costs for these requirements are incidental to the Contract.

9. All sewer service lines shall be inspected by TV camera and videoed then provided to the City's Inspector for review before acceptance by the City. In the event that the first inspection or subsequent inspections after that do not pass, the Contractor will be required to perform additional inspections of the sewer service lines using a TV camera at the Contractor's expense.

10. Manholes shall meet the City of Rio Rancho standards except that there shall be no ladder rungs installed.

11. The Contractor is responsible for testing of all force main lines, including but not limited to hydrostatic and bacteria testing, disinfecting, and flushing. All costs for these requirements are incidental to the Contract.

12. If bypass pumping is required, then a bypass pumping plan must be submitted to the City's Project Manager, for acceptance, seven (7) days before bypass pumping begins.

13. The Contractor shall mark the top of the curb and pan of the gutter with "S" for sanitary sewer following service installation and before final acceptance.

14. Manholes shall be raised to surface course of pavement. Circular concrete collars shall be constructed to surface elevation.

15. No bricks shall be used to adjust manholes to finished grade.

ADA GENERAL NOTES

1. These drawings provide guidance for compliance with the current public right of way accessibility guidelines (PROWAG). These standards shall apply to all new and altered sidewalks.

2. Surfaces shall be stable, firm, and slip resistant. Sidewalk and curb ramp surfaces shall provide consistent slopes within each section.

3. All street striping altered or destroyed during construction shall be replaced by the Contractor to All broom finishes shall be perpendicular to the direction of pedestrian travel.

4. A vertical change of 1/4 inch (6mm) or less is allowed. if between 1/4 inch and 1/2 inch (6mm and 13mm), then it needs to be beveled 2:1. Changes greater than 1/2 inch shall be ramped.

5. Openings or cracks in sidewalk surfaces shall not exceed 1/2 inch (13mm). Elongated openings should be placed so that the long dimension is perpendicular or diagonal to the dominant direction of travel.

6. The least possible curb ramp slope shall be used. Curb ramps running slope shall not exceed 12:1. Where existing terrain is steep, curb ramps shall not exceed 15 feet in length.

7. Provide a flush transition between curb ramps, sidewalks, gutter, and edge of pavement, free of drainage lip, abrupt grade changes, drop-offs, or any surface irregularities. A 5% (20:1) or flatter transition taper shall be provided from the street to the gutter for curb ramps locations (this may require special treatment of the edge of OGFC) when diagonal (not in line with crosswalks) curb ramps are necessary. A 2% (50:1) transition or "lower landing" shall be provided. The gutter running slope (flow line) shall not exceed 2% measured along the bottom of the curb ramp.

8. Curb ramps shall be located to provide the most direct route of travel across the traffic lanes.

9. Two directional (in line with the crosswalks) curb ramps per corner are used in order to provide short and direct crossings for the user.

10. Sign posts, utility poles, fire hydrants, traffic signals standards, light poles, pull boxes, meters, valves, etc., shall not be located in the curb ramp including side flares and landings.

11. In order to better accommodate conditions in the field, the contractor shall obtain final approval of curb ramp locations from the project manager and the city manager and the city traffic engineer. When necessitated by existing physical conditions. Alternate curb ramps must be submitted to the project manager for approval by the city traffic engineer.

12. Landings shall be a minimum of 48" x 48". Slopes shall not exceed 2% (50:1) in all directions.

13. Detectable warnings are required at all street intersections, signalized driveways, commercial driveways 30' wide or greater, and marked mid-block crosswalks.

14. Concrete Procedural note: Before scheduling delivery of concrete, contractor shall meet with City Inspector/PM to ensure the concrete formwork is constructed to dimensions and grades shown on plans and meets PROWAG, 2011 Technical Design Criteria. Calibrate 24" electronic digital level with Contractor's electronic digital level prior to verifying measurements. Verify measurements meet requirements or require correction of all discrepancies before scheduling of concrete to ensure the finished concrete will meet PROWAG. When all measurements meet requirements then the inspector shall permit concrete pour. Repeat the procedure after concrete pour to ensure the curb ramp meets PROWAG compliance. Final acceptance of a curb ramp does not occur until the final inspection of the project. This procedure shall be considered incidental to the installation of the ADA curb ramps.

15. The contractor shall submit a proposed work plan for pedestrian improvements to the project engineer for review and approval prior to initiating this work. This plan shall include the method proposed to maintain pedestrian access to businesses, schools, hospitals, buildings, etc. throughout the pedestrian improvements construction in particular. The contractor, at minimum, shall maintain a 48" clear path for pedestrians so as to meet ADA accessibility requirements. All temporary pedestrian facilities implemented during construction shall comply with ADA standards.

16. Sidewalk and curb ramp cross slope is recommended to be constructed for a cross slope of 1.5% typical, but shall not exceed 2.0% cross slope on the pedestrian access route.

NOTE: USE OF VIBRATORY MODE ON COMPACTION EQUIPMENT IS PROHIBITED.

RioRancho City of Vision

No.	DESCRIPTION	DATE	BY
1			
2			
3			
4			
5			
6			
7			

REVISIONS (OR CHANGE NOTICES)

Designed By: CONLEY ENGINEERING LLC, 5915 Cattale Blvd NE, Albuquerque, NM 87107, 505-331-1587

Designed For: CITY OF RIO RANCHO NEW MEXICO

LISBON AVENUE CULVERT REPLACEMENT

GENERAL NOTES

CORR PWD STANDARD DRAWINGS

PROJECT NO. FS1976
DESIGNED BY: PJC
DRAWN BY: CE LLC
CHECKED BY: PJC
DATE MODIFIED:
DPW CHK:
SHEET: 2

ABBREVIATIONS

AP	ANALYSIS POINT
@	AT
BC	BEGIN CURVE
BCR	BEGIN CURB RETURN
BK	BOOK
BLDG	BUILDING
BM	BENCH MARK
BOP	BEGINNING OF PROJECT
BVC	BEGIN VERTICAL CURVE
BW	BASE OF WALL
CATV	CABLE TV LINE
CB	CATCH BASIN
CF	CURB FACE
CG	CURB AND GUTTER
CL	CHAIN LINK
℄	CENTERLINE
CMP	CORRUGATED METAL PIPE
CO	CLEAN OUT
CONC	CONCRETE
CORR	CITY OF RIO RANCHO
CY	CUBIC YARDS
DUE	DRAINAGE UTILITY EASEMENT
DI	DROP INLET
DIA	DIAMETER
Δ	DELTA
EA	EACH
EC	END CURVE
ECR	END CURB RETURN
ELEV	ELEVATION
EOP	END OF PROJECT
EP	EDGE OF PAVEMENT
ESMT	EASEMENT
EVC	END VERTICAL CURVE
EW	EACH WAY
EXIST	EXISTING
FF	FINISH FLOOR
FG	FINISH GRADE
FH	FIRE HYDRANT
℄	FLOW LINE
FOC	FACE OF CURB
FP	FINISHED PAD
G	GAS
GM	GAS METER
GV	GATE VALVE
HORIZ	HORIZONTAL
INT	INTERSECTION
INV	INVERT
INV EL	INVERT ELEVATION
LF	LINEAR FEET
LP	LIGHT POLE
LT	LEFT
MH	MANHOLE
NG	NATURAL GROUND
OC	ON CENTER
PB	PULL BOX
PC	POINT OF CURVATURE
PCC	POINT OF COMPOUND CURVATURE
PG	PAGE
PGL	PROFILE GRADE LINE PER TYPICAL SECTION
PI	POINT OF INTERSECTION
ℙ	PROPERTY LINE
PRC	POINT OF REVERSE CURVATURE
PT	POINT OF TANGENCY
PUE	PUBLIC UTILITY EASEMENT
PVC	POLYVINYL CHLORIDE PIPE
PVMT	PAVEMENT
RAD	RADIUS
RCP	REINFORCED CONCRETE PIPE
RD	ROOF DRAIN
REF	REFERENCE
ROW	RIGHT-OF-WAY
RT	RIGHT
R/W	RIGHT-OF-WAY
S	SLOPE
SAS	SANITARY SEWER LINE
SD	STORM DRAIN
SF	SQUARE FEET
STA	STATION
STD	STANDARD
SW	SIDEWALK
SY	SQUARE YARDS
T	TANGENT
TA	TOP OF ASPHALT
TAC	TOP OF ASPHALT CURB
TBC	TOP BACK OF CURB
TC	TOP OF CONCRETE
TEL	TELEPHONE LINE, RISER OR BOX
TP	TOP OF PIPE
TRANS	TRANSVERSE
TW	TOP OF WALL
TYP	TYPICAL
UE	UNDERGROUND ELECTRICAL LINE
UT	UNDERGROUND TELEPHONE LINE
VC	VERTICAL CURVE
VERT	VERTICAL
VPI	VERTICAL POINT OF INTERSECTION
W	WATERLINE
WM	WATER METER
WSEL	WATER SURFACE ELEVATION
WV	WATER VALVE

LEGEND

- EXISTING WATER VALVE
- EXISTING TELEPHONE PEDESTAL
- EXISTING TELEVISION PEDESTAL
- EXISTING ELECTRIC BOX
- EXISTING ELECTRIC TRANSFORMER
- EXISTING FIRE HYDRANT
- EXISTING WATER METER
- EXISTING SANITARY MANHOLE
- SURVEY CONTROL POINT
- EXISTING MAILBOX
- EXISTING TREE
- EXISTING BUSH
- 5391 — EXISTING CONTOUR
- EXISTING CHAINLINK FENCE
- EXISTING WOOD FENCE
- EXISTING GUARDRAIL
- NM811 WATER UTILITY SPOT
- NM811 TELEPHONE UTILITY SPOT
- NM811 CABLE TV UTILITY SPOT
- NM811 SANITARY SEWER UTILITY SPOT
- NM811 ELECTRIC UTILITY SPOT
- CENTERLINE LISBON AVE. ROW (64' WIDE)
- EXISTING PROPERTY LINE
- EXISTING STAMPED CONCRETE
- NEW WATER VALVE
- TH # — UTILITY TEST HOLE
- CONSTRUCTION BASELINE
- POINT OF DISCONNECT
- 12 — KEYED NOTE
- SLOPE INDICATOR
- STEEL CASING - PROFILE VIEW
- CONCRETE
- EARTH
- GRAVEL/RIP RAP
- ASPHALT

RioRancho City of Vision

No.	DESCRIPTION	DATE	BY
1			
2			
3			
4			
5			
6			
7			

REVISIONS (OR CHANGE NOTICES)

Designed By: CONLEY ENGINEERING LLC, 5915 Cutlass Blvd NE, Albuquerque, NM 87107, 505-331-1587

Designed For: CITY OF RIO RANCHO NEW MEXICO

LISBON AVENUE CULVERT REPLACEMENT

ABBREVIATIONS AND LEGEND

LICENSED PATRICK J. CONLEY NEW MEXICO 10141 PROFESSIONAL ENGINEER 9/4/2019

PROJECT NO. FS1976
DESIGNED BY: PJC
DRAWN BY: CE LLC
CHECKED BY: PJC
DATE MODIFIED:
DPW CHK:
SHEET: 3

Survey Control Point Table				
Point #	Description	Elevation	Northing	Easting
50	#5 REBAR W/PLASTIC CAP	5533.32	1547625.296	1503772.476
51	#5 REBAR W/PLASTIC CAP	5550.40	1547988.727	1503670.293
52	#5 REBAR W/PLASTIC CAP	5534.08	1547297.174	1503461.223

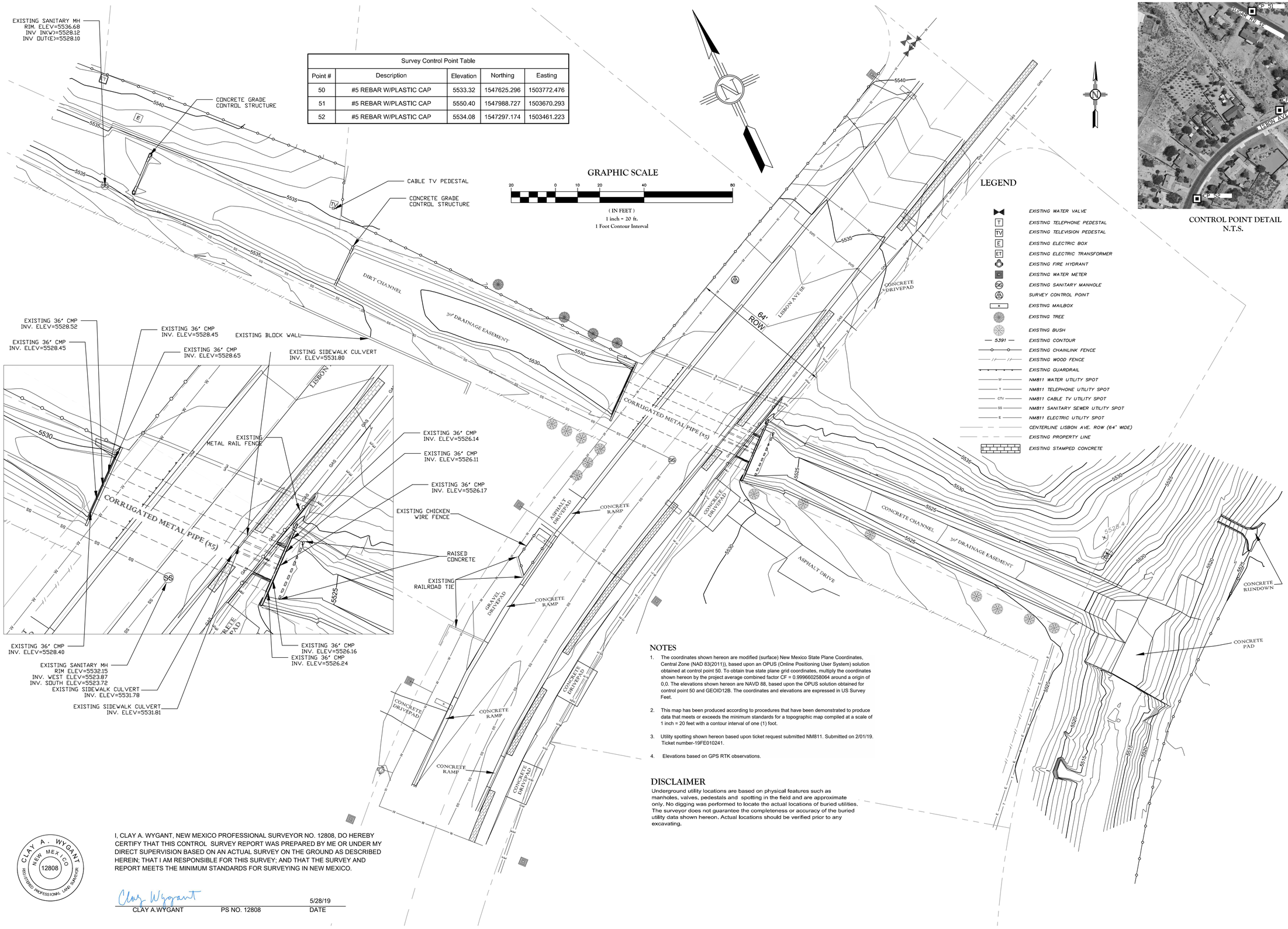

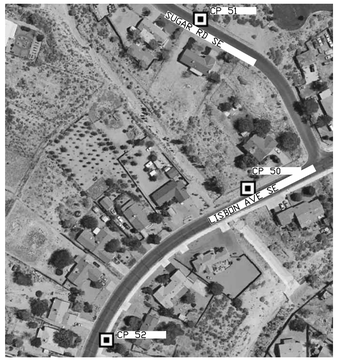

CONTROL POINT DETAIL
N.T.S.

NOTES

1. The coordinates shown hereon are modified (surface) New Mexico State Plane Coordinates, Central Zone (NAD 83/2011)), based upon an OPUS (Online Positioning User System) solution obtained at control point 50. To obtain true state plane grid coordinates, multiply the coordinates shown hereon by the project average combined factor CF = 0.999660258064 around a origin of 0,0. The elevations shown hereon are NAVD 88, based upon the OPUS solution obtained for control point 50 and GEOID12B. The coordinates and elevations are expressed in US Survey Feet.
2. This map has been produced according to procedures that have been demonstrated to produce data that meets or exceeds the minimum standards for a topographic map compiled at a scale of 1 inch = 20 feet with a contour interval of one (1) foot.
3. Utility spotting shown hereon based upon ticket request submitted NM811. Submitted on 2/01/19. Ticket number-19FE010241.
4. Elevations based on GPS RTK observations.

DISCLAIMER

Underground utility locations are based on physical features such as manholes, valves, pedestals and spotting in the field and are approximate only. No digging was performed to locate the actual locations of buried utilities. The surveyor does not guarantee the completeness or accuracy of the buried utility data shown hereon. Actual locations should be verified prior to any excavating.

CLAY A. WYGANT
NEW MEXICO
12808
REGISTERED PROFESSIONAL LAND SURVEYOR

I, CLAY A. WYGANT, NEW MEXICO PROFESSIONAL SURVEYOR NO. 12808, DO HEREBY CERTIFY THAT THIS CONTROL SURVEY REPORT WAS PREPARED BY ME OR UNDER MY DIRECT SUPERVISION BASED ON AN ACTUAL SURVEY ON THE GROUND AS DESCRIBED HEREIN; THAT I AM RESPONSIBLE FOR THIS SURVEY; AND THAT THE SURVEY AND REPORT MEETS THE MINIMUM STANDARDS FOR SURVEYING IN NEW MEXICO.

Clay Wygant 5/28/19
CLAY A.WYGANT PS NO. 12808 DATE

RioRancho
City of Vision

No.	DESCRIPTION	DATE	BY
1			
2			
3			
4			
5			
6			
7			

REVISIONS (OR CHANGE NOTICES)

Designed For:
CITY OF RIO RANCHO
NEW MEXICO

LISBON AVENUE CULVERT REPLACEMENT

TOPOGRAPHIC SURVEY

MASER CONSULTING P.A.
2500 Louisiana Blvd. NE Ste. 101.
Albuquerque, NM 87110, 505-433-6383

PROJECT NO. 19004170A
DESIGNED BY:
DRAWN BY: TTK/AJP
CHECKED BY: JJP/GT
DATE MODIFIED: 3/21/19
DPW CHK:
SHEET: 4

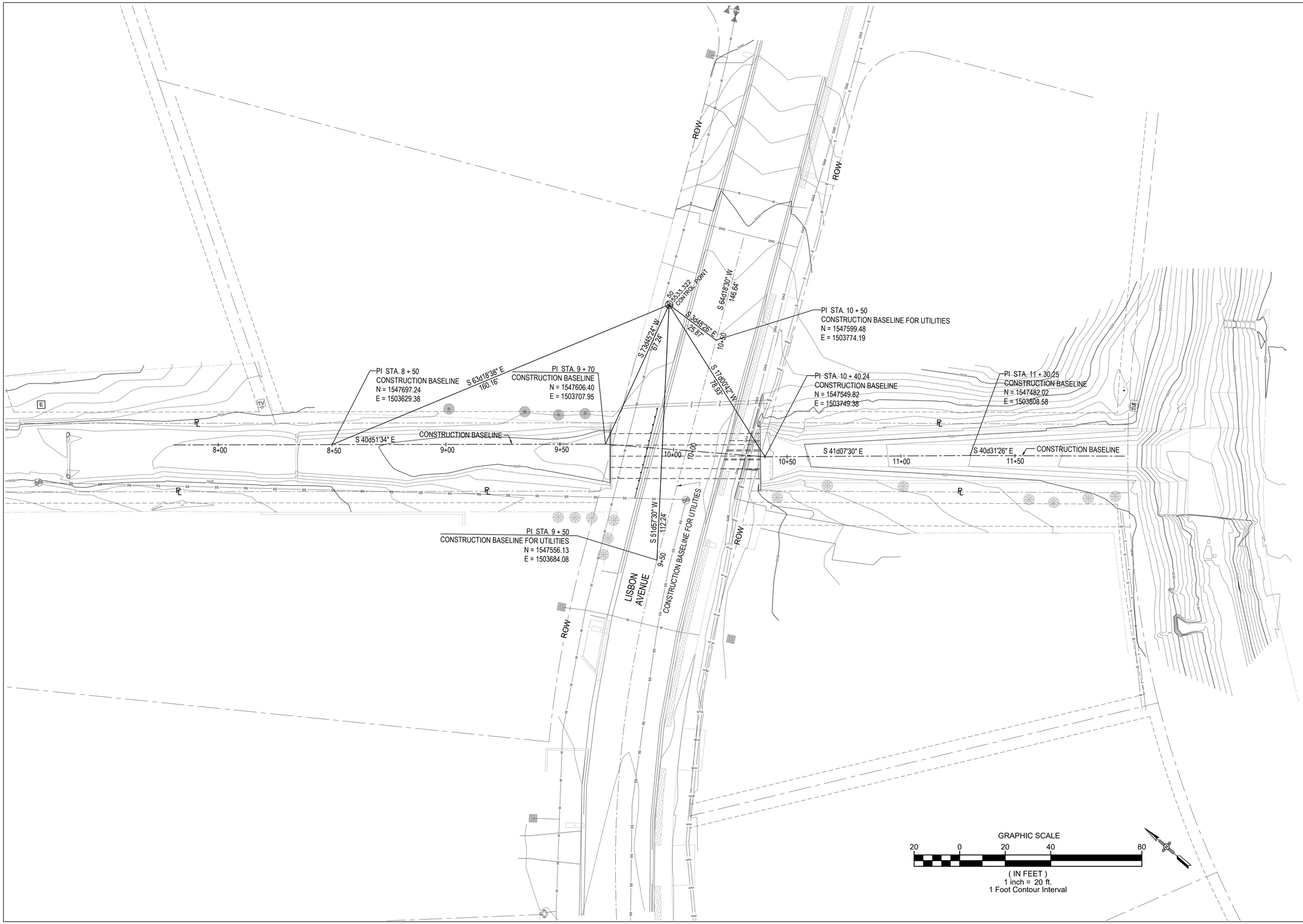

RioRancho
City of Vision

No.	DESCRIPTION	DATE	BY
1			
2			
3			
4			
5			
6			
7			

REVISIONS (OR CHANGE NOTICES)

Designed By:
CONLEY ENGINEERING LLC
3915 Carlisle Blvd NE Albuquerque, NM 87107 505-331-1587

Designed For:
CITY OF RIO RANCHO
NEW MEXICO

LISBON AVENUE
CULVERT REPLACEMENT

PROJECT CONTROL PLAN

PATRICK J. CONLEY
NEW MEXICO
10141
LICENSED PROFESSIONAL ENGINEER
9/4/2019

PROJECT NO. FS1976
DESIGNED BY: PJC
DRAWN BY: CE LLC
CHECKED BY: PJC
DATE MODIFIED:
DPW CHK:
SHEET: 5

KEYED NOTES

1. REMOVE AND DISPOSE OF EXISTING RPCC HEADWALL.
2. REMOVE AND DISPOSE OF EXISTING W-BEAM GUARD RAIL AND WOOD POSTS.
3. REMOVE AND DISPOSE OF FIVE (5) EXISTING 36 - INCH DIAMETER CMP CULVERTS. PLAN ONLY SHOWS CENTERLINE FOR CLARITY.
4. SAWCUT, REMOVE AND DISPOSE OF EXISTING ROLL CURB-AND-GUTTER.
5. SAWCUT, REMOVE AND DISPOSE OF EXISTING ASPHALTIC CONCRETE PAVEMENT.
6. REMOVE AND DISPOSE OF EXISTING STANDARD PCC CURB.
7. REMOVE AND DISPOSE OF EXISTING PCC SIDEWALK AND SIDEWALK CULVERTS.
8. REMOVE AND DISPOSE OF EXISTING PIPE RAILING.
9. SAWCUT, REMOVE AND DISPOSE OF EXISTING REINFORCED SHOTCRETE CHANNEL LINING AND BAFFLE BLOCKS.
10. SAWCUT, REMOVE AND DISPOSE OF EXISTING RPCC CHANNEL LINING.
11. ADJUST EXISTING SAS MANHOLE RING AND COVER TO NEW ROAD GRADE.
12. REMOVE AND DISPOSE OF EXISTING RPCC RUNDOWN.
13. REMOVE AND DISPOSE OF EXISTING TREES.
14. REMOVE AND DISPOSE OF EXISTING LARGE BUSHES. THESE ITEMS PAID FOR UNDER "CLEAR AND GRUB" BID ITEM.
15. REMOVE AND STORE EXISTING WOOD SPLIT RAIL FENCE TO LIMITS SHOWN. REINSTALL WOOD FENCE AFTER CONSTRUCTION IS COMPLETE.
16. REMOVE AND DISPOSE OF 4' CHAINLINK FENCE AND POSTS TO LIMITS SHOWN. CONTRACTOR MAY USE EXISTING FABRIC FOR TEMPORARY 4' CHAINLINK FENCING.
17. REMOVE EXISTING TREES AS REQUIRED FOR INSTALLATION OF NEW 10" WATERLINE. COORDINATE EXTENT OF REMOVALS WITH ENGINEER.
18. INSTALL TEMPORARY 4' CHAINLINK FENCE. SEE SHEET 7.

POINT OF REMOVAL FOR FENCE REMOVAL. FIELD ADJUST TO NEAREST POST.

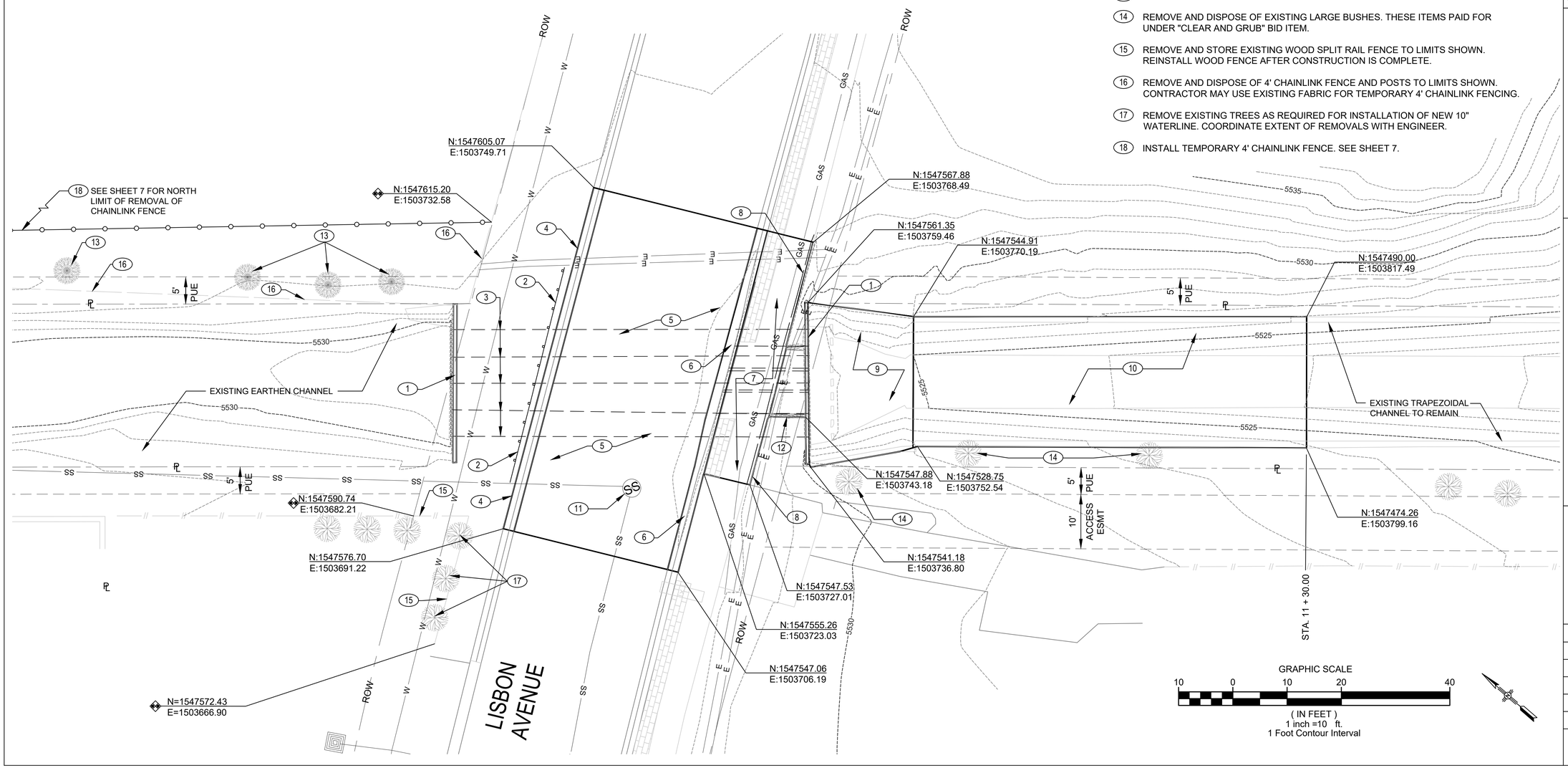

RioRancho City of Vision

No.	DESCRIPTION	DATE	BY
1			
2			
3			
4			
5			
6			
7			

REVISIONS (OR CHANGE NOTICES)

Designed By: CONLEY ENGINEERING LLC, 3915 Carlisle Blvd NE, Albuquerque, NM 87107, 505-331-1587

Designed For: CITY OF RIO RANCHO NEW MEXICO

LISBON AVENUE CULVERT REPLACEMENT

REMOVAL PLAN

PATRICK J. CONLEY, NEW MEXICO, 10141, LICENSED PROFESSIONAL ENGINEER, 7/27/2020

PROJECT NO. FS1976
DESIGNED BY: PJC
DRAWN BY: CE LLC
CHECKED BY: PJC
DATE MODIFIED:
DPW CHK:
SHEET: 6

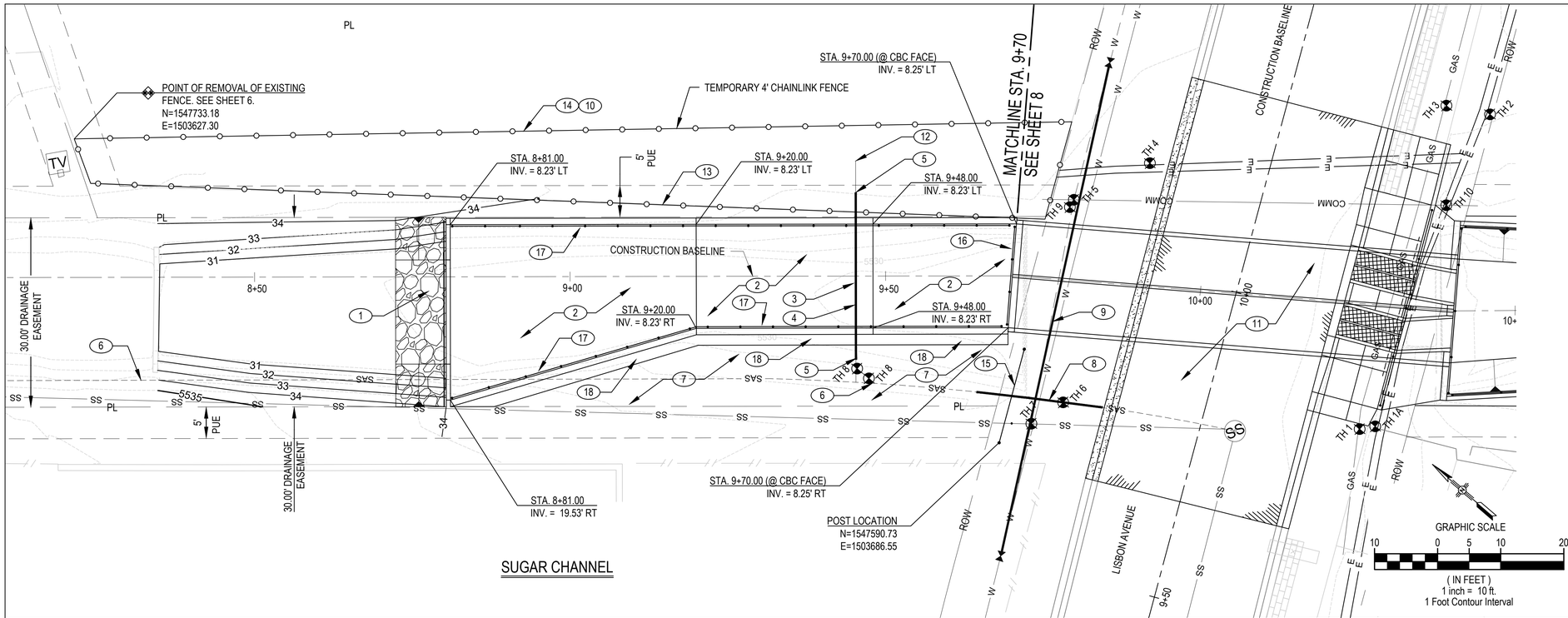

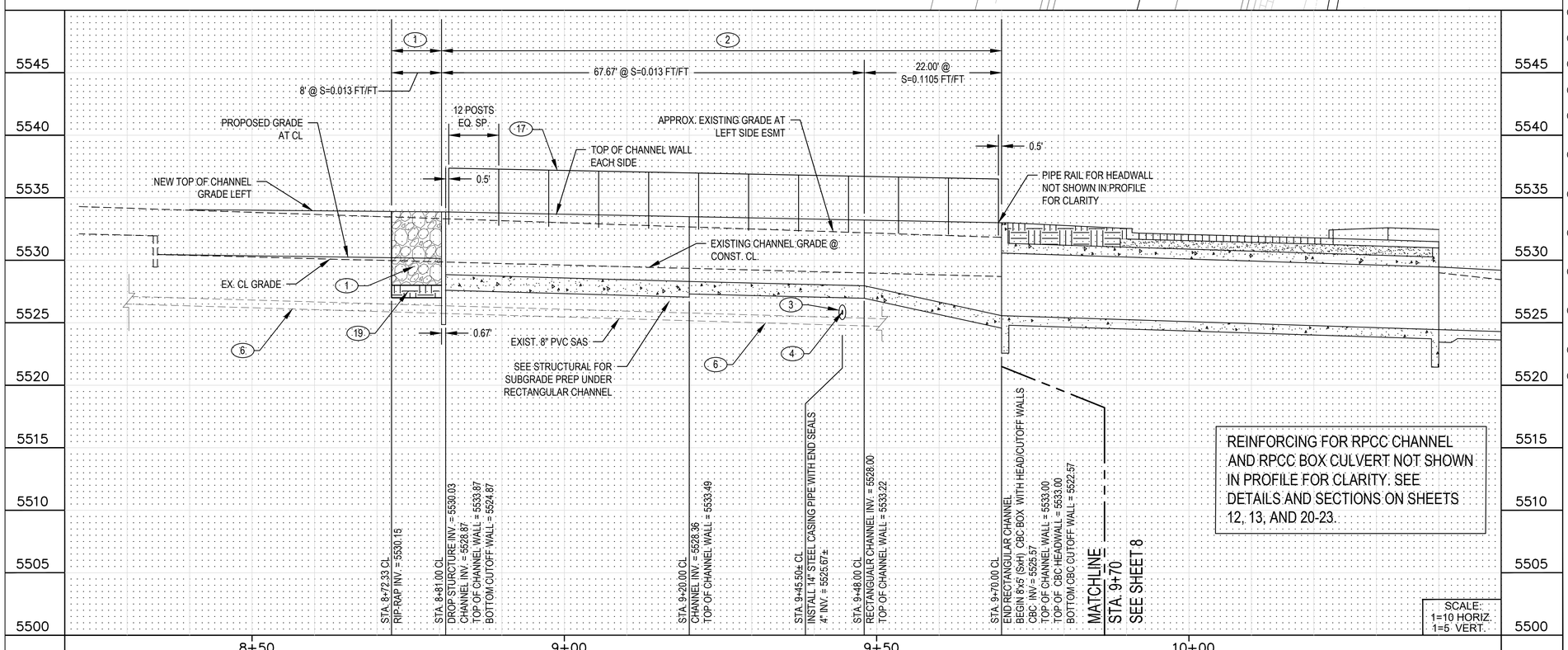

REINFORCING FOR RPCC CHANNEL AND RPCC BOX CULVERT NOT SHOWN IN PROFILE FOR CLARITY. SEE DETAILS AND SECTIONS ON SHEETS 12, 13, AND 20-23.

GENERAL NOTES

1. THE SYMBOL ⊕ INDICATES UTILITY LINE LOCATIONS DETERMINED BY SUE LINE LOCATION AND TEST HOLES. UTILITY LOCATIONS SHOWN ARE APPROXIMATE. SEE SHEET 10 FOR LINE LOCATION DATA.
2. CONTRACTOR SHALL VERIFY HORIZONTAL AND VERTICAL LOCATIONS OF UTILITIES PRIOR TO THE START OF CONSTRUCTION. THIS EFFORT IS INCIDENTAL TO THE CONSTRUCTION AND NO SEPARATE PAYMENT WILL BE MADE FOR THIS WORK.

KEYED NOTES

1. CONSTRUCT 2' THICK RIP-RAP WITH D50 = 6".
2. CONSTRUCT RPCC RECTANGULAR CHANNEL. SEE DETAILS SHEETS 11 AND 12.
3. INSTALL 26 LF 14"Ø STEEL CASING PIPE AND CASING SPACERS. INSTALL CASING SPACERS PER MANUFACTURER'S INSTRUCTIONS. CASING PIPE SHALL HAVE FACTORY APPLIED COATING INSIDE AND OUTSIDE.
4. REMOVE AND DISPOSE OF EXISTING 4" SAS SERVICE LINE. INSTALL NEW 4" PVC SERVICE AT S=2.00%. 4" SAS LINE SHALL SLOPE FROM NORTHEAST TO SOUTHWEST. CONTRACTOR SHALL NOTIFY ENGINEER AFTER SERVICE CONNECTION AT SAS MAIN IS EXPOSED SO THAT ENGINEER CAN MAKE ADJUSTMENTS TO THE INVERTS OF THE SAS SERVICE LINE.
5. INSTALL END SEALS EACH END OF 12" STEEL CASING PIPE.
6. CONTRACTOR TO PROTECT AND SUPPORT EXISTING 8" SAS DURING CONSTRUCTION.
7. CONSTRUCT 6" AGGREGATE BASE COURSE ACCESS ROAD.
8. SAS ENCASEMENT. SEE SHEET 10.
9. NEW 10" WATERLINE. SEE SHEET 10.
10. TEMPORARY 4' CHAINLINK FENCE.
11. SEE SHEET 9 FOR SURFACE IMPROVEMENTS
12. INSTALL PVC CAP AT NORTHEAST END OF 4" SAS SERVICE LINE.
13. INSTALL NEW 4' CHAINLINK FENCE AND POSTS AFTER CONSTRUCTION IS COMPLETE.
14. REMOVE AND DISPOSE OF TEMPORARY 4' CHAINLINK FENCE AFTER NEW 4' CHAINLINK FENCE IS INSTALLED.
15. CHANNEL ACCESS GATE PER DETAIL SHEET 14. COORDINATE WITH SSCAFCA ON SWING DIRECTION.
16. INSTALL WALL MOUNT PIPE RAIL. SEE SHEET 15 FOR DETAILS.
17. INSTALL WALL MOUNT PIPE RAIL. INSTALL ON EACH SIDE OF NEW CHANNEL. SEE SHEET 15 FOR DETAILS.
18. CONSTRUCT LOW FLOW SWALE. SEE DETAIL SHEET 8.
19. COMPACT 12" SUBGRADE UNDER RIP RAP TO 95% ASTM D-1557.

NOTE: CONTRACTOR SHALL NOTIFY ENGINEER WHEN EXISTING 8" SAS AND 4" SAS SERVICE ARE EXPOSED SO THAT ENGINEER MAY MAKE MODIFICATIONS TO THE DESIGN AS NECESSARY.

RioRancho City of Vision

No.	DESCRIPTION	DATE	BY
7			
6			
5			
4			
3			
2			
1			

REVISIONS (OR CHANGE NOTICES)

Designed By: CONLEY ENGINEERING LLC, 3915 Carlisle Blvd NE, Albuquerque, NM 87107, 505-331-1387

Designed For: CITY OF RIO RANCHO NEW MEXICO

LISBON AVENUE CULVERT REPLACEMENT

CHANNEL PLAN AND PROFILE STA. 8+35 TO STA. 9+70

LICENSED PROFESSIONAL ENGINEER PATRICK J. CONLEY NEW MEXICO 10141

PROJECT NO.	FS1976
DESIGNED BY:	PJC
DRAWN BY:	CE LLC
CHECKED BY:	PJC
DATE MODIFIED:	
DPW CHK:	

SHEET: 7

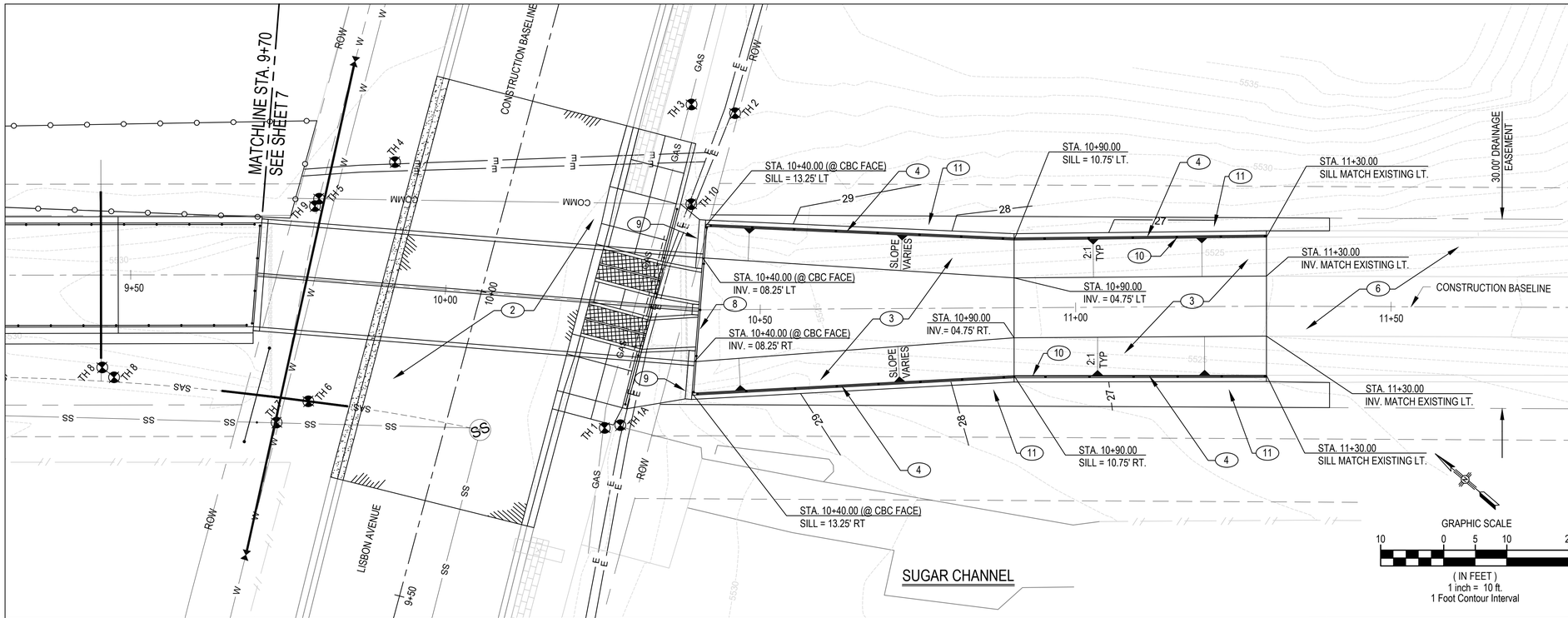

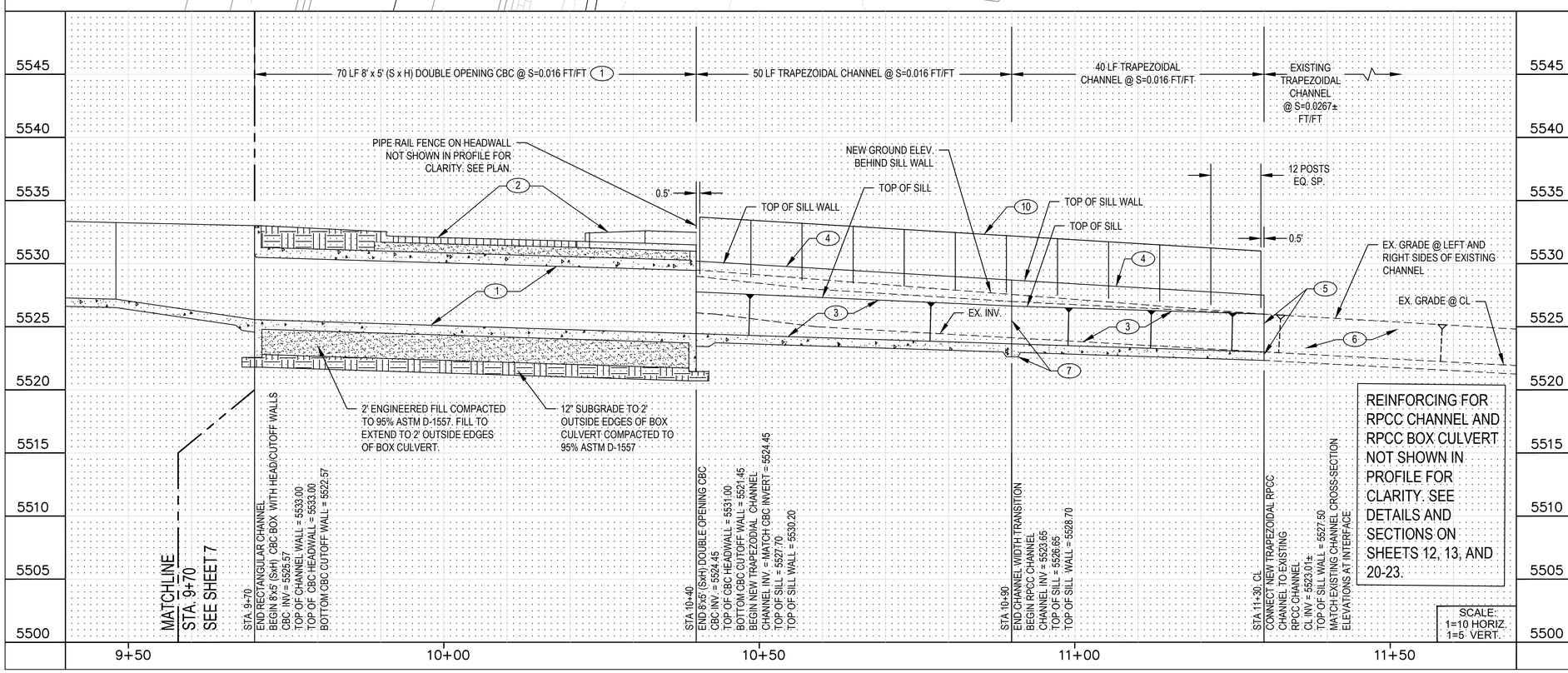

GENERAL NOTES

1. THE SYMBOL ✥ INDICATES UTILITY LINE LOCATIONS DETERMINED BY SUE LINE LOCATION AND TEST HOLES. UTILITY LOCATIONS SHOWN ARE APPROXIMATE.
2. CONTRACTOR SHALL VERIFY HORIZONTAL AND VERTICAL LOCATIONS OF UTILITIES PRIOR TO THE START OF CONSTRUCTION. THIS EFFORT IS INCIDENTAL TO THE CONSTRUCTION AND NO SEPARATE PAYMENT WILL BE MADE FOR THIS WORK.

KEYED NOTES

1. CONSTRUCT 8'x5' (SxH) DOUBLE CBC WITH HEADWALLS AND CUTOFF WALLS PER NMDOT STD DWGS. SEE DETAIL SHEETS 20 THROUGH 23.
2. SEE SHEET 9 FOR LISBON AVENUE ROAD SURFACE IMPROVEMENTS.
3. CONSTRUCT TRAPEZOIDAL RPCC CHANNEL PER DETAILS SHEET 13.
4. CONSTRUCT SILL WALL PER DETAILS SHEET 13.
5. CONNECT NEW TRAPEZOIDAL RPCC CHANNEL TO EXISTING TRAPEZOIDAL RPCC CHANNEL PER DETAIL SHEET 13.
6. EXISTING TRAPEZOIDAL RPCC CHANNEL.
7. CONSTRUCTION JOINT PER DETAIL SHEET 13
8. INSTALL WALL MOUNT PIPE RAIL. SEE SHEET 15 FOR DETAILS.
9. CONSTRUCT RETAINING WALL PER DETAILS SHEET 12A.
10. INSTALL WALL MOUNT PIPE RAIL. INSTALL ON NEW SILL WALL ON EACH SIDE OF CHANNEL. SEE SHEET 15 FOR DETAILS.
11. CONSTRUCT LOW FLOW SWALE. SEE DETAIL THIS SHEET.

RioRancho City of Vision

No.	DESCRIPTION	DATE	BY
1			
2			
3			
4			
5			
6			
7			

REVISIONS (OR CHANGE NOTICES)

Designed By: CONLEY ENGINEERING LLC, 3915 Carlisle Blvd NE, Albuquerque, NM 87107, 505-331-1387

Designed For: CITY OF RIO RANCHO NEW MEXICO

LISBON AVENUE CULVERT REPLACEMENT

CBC AND CHANNEL PLAN & PROFILE STA. 9+70 TO STA. 11+30

PATRICK J. CONLEY, NEW MEXICO, 10141, LICENSED PROFESSIONAL ENGINEER

PROJECT NO.	FS1976
DESIGNED BY:	PJC
DRAWN BY:	CE LLC
CHECKED BY:	PJC
DATE MODIFIED:	
DPW CHK:	
SHEET:	8

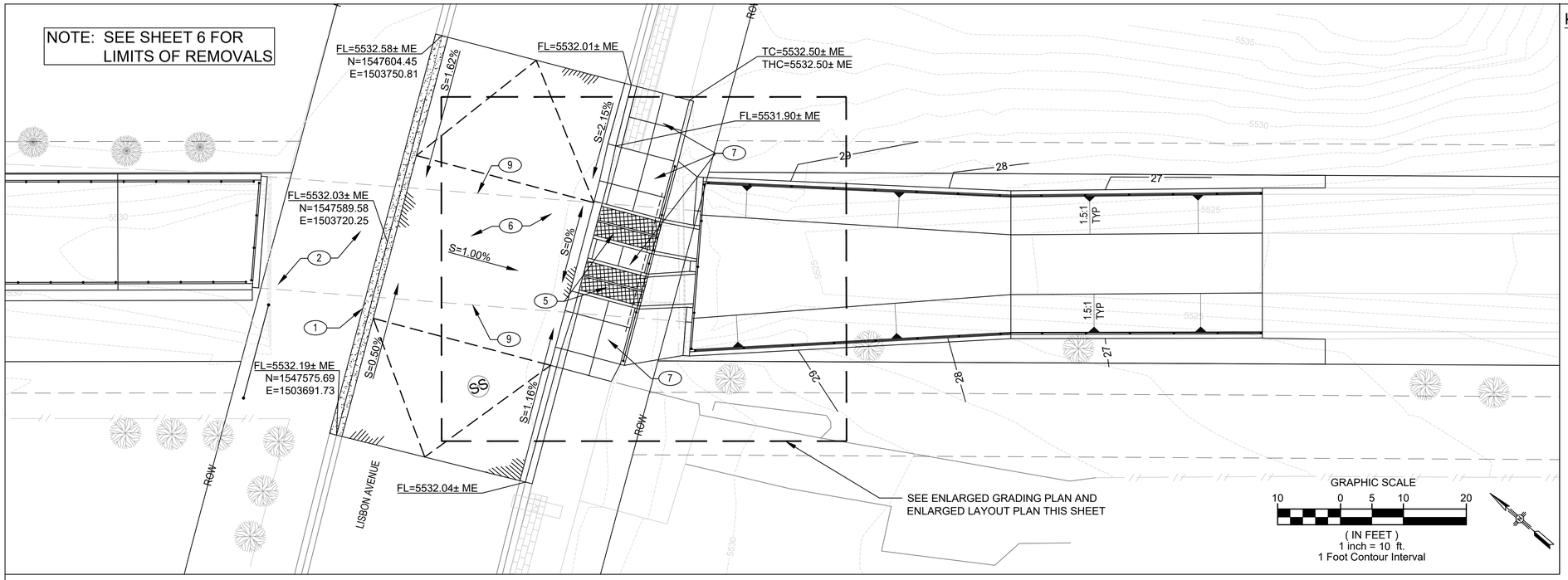

KEYED NOTES

1. CONSTRUCT 4" ROLL CURB WITH SPILL PAN PER DETAIL SHEET 16.
2. BACKFILL AREA BETWEEN CURB AND HEADWALL TO 95% ASTM D-1557.
3. TRANSITION FROM EXISTING CURB AND GUTTER TO NEW 8" CURB AND GUTTER.
4. 8" CURB AND GUTTER PER CORR STD DWG. CG-01 SHEET 18.
5. CONSTRUCT DOUBLE 24" SIDEWALK CULVERT PER NM APWA STD DWG 2236 AND AS MODIFIED IN THESE DRAWINGS.
6. CONSTRUCT NEW LISBON AVENUE ASPHALT PAVEMENT SECTION PER DETAIL SHEET 18.
7. CONSTRUCT SIDEWALK PER CORR STD DWG.
8. INSTALL PIPE RAIL FENCE ON NEW HEADER CURB PER DETAIL SHEET 15.
9. OUTSIDE EDGE OF NEW CBC.
10. CONSTRUCT RPCC RUNDOWN AND SLOPE PAVING.
11. INSTALL 2" Ø PVC PERFORATED DRAIN PIPE PER DETAIL SHEET 17.

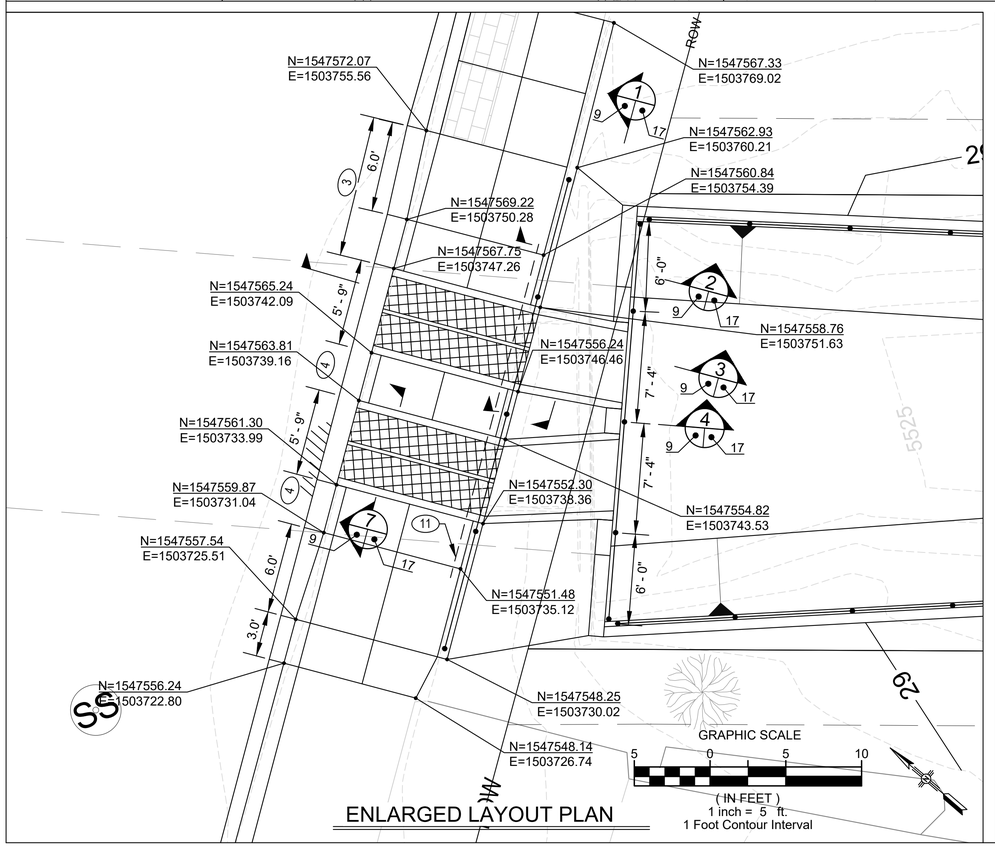

ENLARGED LAYOUT PLAN

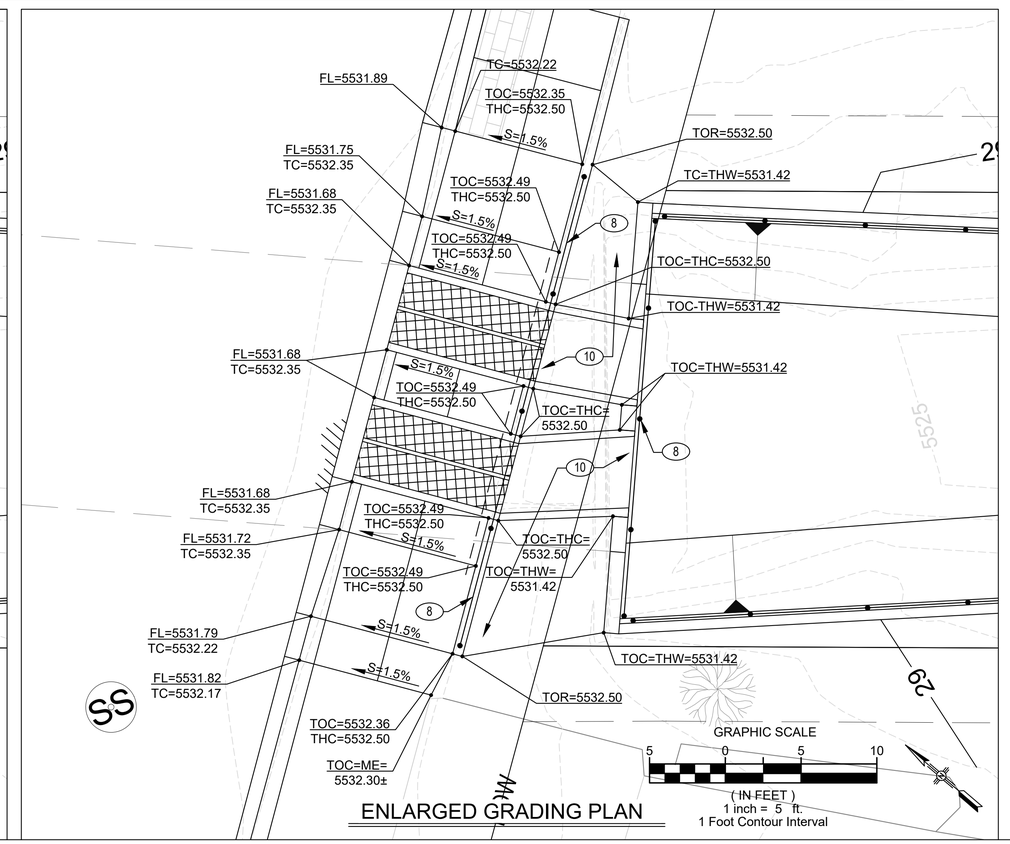

ENLARGED GRADING PLAN

LEGEND

FL = FLOWLINE
INV = INVERT
ME = MATCH EXISTING
S = SLOPE
TC = TOP CURB
THC = TOP HEADER CURB
THW = TOP OF HEADWALL
TOC = TOP OF CONCRETE
TOR = TOP OF ROCK

RioRancho City of Vision

No.	DESCRIPTION	DATE	BY
7			
6			
5			
4			
3			
2			
1			

REVISIONS (OR CHANGE NOTICES)

Designed By: CONLEY ENGINEERING LLC, 3913 Cordial Blvd NE, Albuquerque, NM 87107, 505-331-1367

Designed For: CITY OF RIO RANCHO NEW MEXICO

LISBON AVENUE CULVERT REPLACEMENT

LISBON AVENUE GRADING AND PAVING PLAN

PATRICK J. CONLEY NEW MEXICO 10141 LICENSED PROFESSIONAL ENGINEER 4/27/2020

PROJECT NO.	FS1976
DESIGNED BY:	PJC
DRAWN BY:	CE LLC
CHECKED BY:	PJC
DATE MODIFIED:	
DPW CHK:	
SHEET:	9

TEST HOLE DATA

TEST HOLE	DESCRIPTION	OWNER	MATERIAL	UTILITY SIZE	DEPTH	ELEV. (TOP OF UTILITY)
TH 1	GAS	NM GAS CO.	NOT FOUND	NOT FOUND	NOT FOUND	N/A
TH 01-A	GAS	NM GAS CO.	NOT FOUND	NOT FOUND	NOT FOUND	N/A
TH 2	ELECTRIC	PNM	DIRECT BURIED CABLE	2 X 0.15'	6.60'	5525.80
TH 3	GAS	NM GAS CO.	WRAPPED STEEL	0.33'	4.81'	5527.88
TH 4	ELECTRIC	PNM	DIRECT BURIED CABLE	2 X 0.15'	3.35'	5529.59
TH 5	WATER	CORR	PVC	0.83'	5.44'	5527.67
TH 6	SANITARY SEWER	CORR	PVC	0.67'	7.30'	5525.52
TH 7	WATER	CORR	DUCTILE IRON	1.00'	7.72'	5525.17
TH 8	SANITARY SEWER	CORR	PVC	0.33' 1.00	5.73' 6.55'	5525.99 5525.73
TH 9	TELEPHONE	CENTURY LINK	DIRECT BURIED CABLE	0.05'	4.35'	5528.75
TH 10	TELEPHONE	CENTURY LINK	PVC	0.20'	2.11'	5527.62

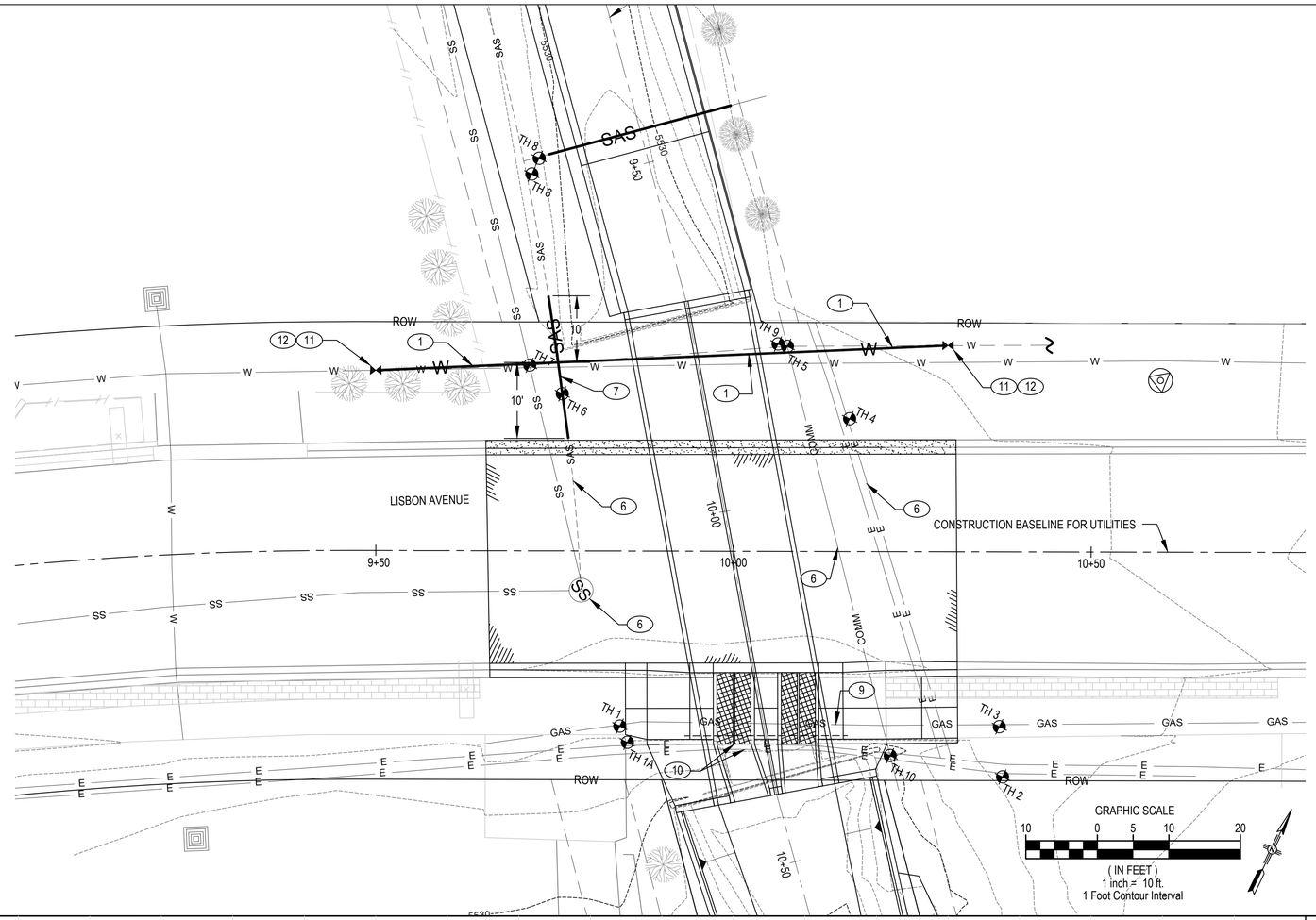

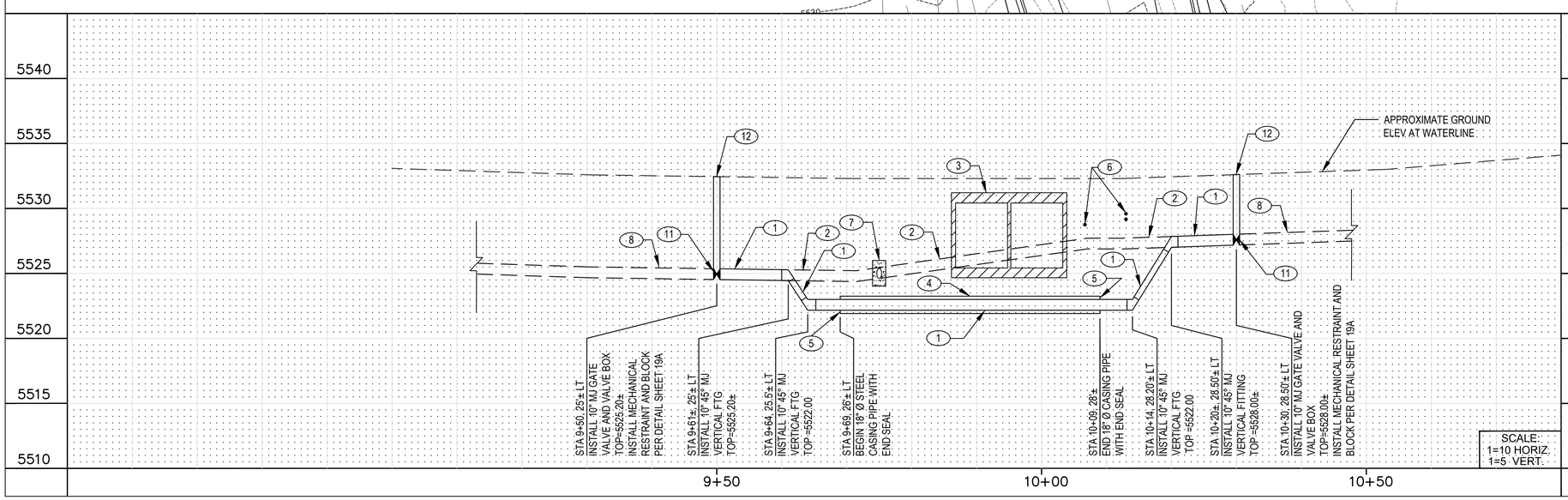

GENERAL NOTES

1. THE SYMBOL ✥ INDICATES UTILITY LINE LOCATIONS DETERMINED BY SUE LINE LOCATION AND TEST HOLES. UTILITY LOCATIONS SHOWN ARE APPROXIMATE.
2. CONTRACTOR SHALL FIELD VERIFY HORIZONTAL AND VERTICAL LOCATION OF UTILITIES PRIOR TO THE START OF CONSTRUCTION. THIS EFFORT IS INCIDENTAL TO THE CONSTRUCTION AND NO SEPARATE PAYMENT WILL BE MADE FOR THE WORK.
3. INSTALL ELECTRONIC MARKERS FOR NEW WATERLINE IN ACCORDANCE WITH CORR STD SPECIFICATIONS AND STD DWGS.
4. UTILITIES SHOWN WITH DASHED LINES WERE LOCATED WITH SUE. ALL OTHER UTILITIES ARE FROM ONE CALL SPOTTING.

KEYED NOTES

1. INSTALL NEW 10" DUTILE IRON WATERLINE (FULLY RESTRAINED FOR LENGTH OF PIPE.)
2. REMOVE AND DISPOSE OF EXISTING 10" WATERLINE TO NEW CONNECTION LIMITS.
3. NEW DOUBLE CBC.
4. INSTALL 40 LF OF 18" Ø STEEL CASING PIPE AND CASING SPACERS. INSTALL STAINLESS STEEL CASING SPACERS PER MANUFACTURER'S INSTRUCTIONS. PROVIDE FULL RESTRAINT OF WATERLINE IN CASING PIPE. CASING PIPE SHALL HAVE FACTORY- APPLIED COATING INSIDE AND OUTSIDE.
5. INSTALL END SEALS EACH END OF 18" CASING.
6. CONTRACTOR TO SUPPORT AND PROTECT EXISTING SAS MANHOLE AND WATER, COMMUNICATIONS, POWER, AND SAS LINES DURING CONSTRUCTION.
7. CONSTRUCT RPCC CONCRETE ENCASEMENT OF EXISTING 8" SAS TO 10' EACH SIDE OF NEW WATERLINE. SEE DETAIL SHEET 19.
8. EXISTING 10" WATERLINE TO REMAIN. EXCAVATE EXISTING 10" PVC WATERLINE NORTH AND SOUTH OF THE NEW VALVE AND INSTALL SPLIT JOINT RESTRAINTS TO ALL JOINTS WITHIN 120 FEET OF THE NEW 10" VALVES.
9. EXISTING 4" GAS LINE TO BE RELOCATED BY OTHERS.
10. EXISTING BURIED ELECTRICAL LINE TO BE RELOCATED BY OTHERS.
11. INSTALL 10" MJ GATE VALVE PER DETAIL SHEET 19A.
12. NEW WATER VALVE BOX FOR 10" GATE VALVE. SEE DETAIL SHEET 19A.

NOTE: CONTRACTOR SHALL NOTIFY ENGINEER AFTER EXISTING WATERLINE IS EXPOSED SO THAT ENGINEER CAN MAKE ADJUSTMENTS TO THE WATERLINE DESIGN AS NECESSARY.

RioRancho City of Vision

REVISIONS (OR CHANGE NOTICES)

No.	DESCRIPTION	DATE	BY
1			
2			
3			
4			
5			
6			
7			

Designed By: CONLEY ENGINEERING LLC, 3915 Carlisle Blvd NE, Albuquerque, NM 87107, 505-331-1387

Designed For: CITY OF RIO RANCHO NEW MEXICO

LISBON AVENUE CULVERT REPLACEMENT

LISBON AVENUE UTILITY PLAN AND PROFILE

PATRICK J. CONLEY, NEW MEXICO 10141, LICENSED PROFESSIONAL ENGINEER, 4/3/2020

PROJECT NO. FS1976
DESIGNED BY: PJC
DRAWN BY: CE LLC
CHECKED BY: PJC
DATE MODIFIED:
DPW CHK:
SHEET: 10

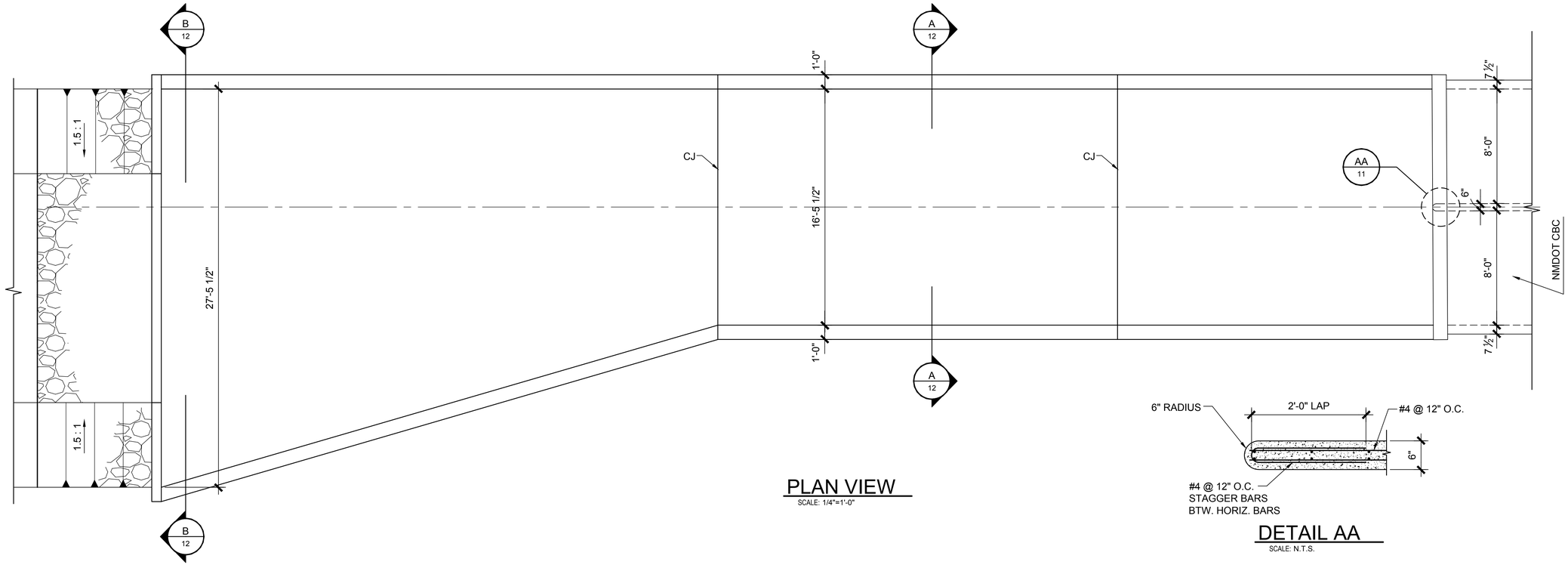

PLAN VIEW

SCALE: 1/4"=1'-0"

DETAIL AA

SCALE: N.T.S.

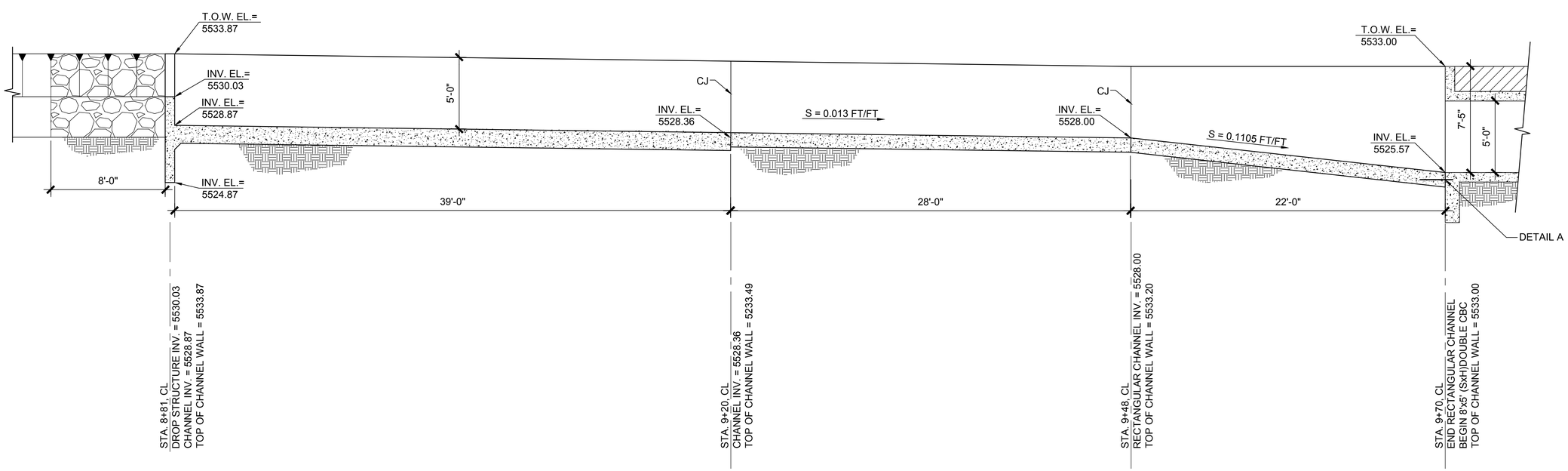

LONGITUDINAL PROFILE

SCALE: 1/4"=1'-0"

RioRancho
City of Vision

No.	DESCRIPTION	DATE	BY
1			
2			
3			
4			
5			
6			
7			

REVISIONS (OR CHANGE NOTICES)

Designed By: QUIROGA - PFEIFFER ENGINEERING CORPORATION

Designed For: CITY OF RIO RANCHO NEW MEXICO

LISBON AVENUE CULVERT REPLACEMENT

PLAN and LONGITUDINAL PROFILE

FERNANDO O. QUIROGA NEW MEXICO 10646 REGISTERED PROFESSIONAL ENGINEER
09-03-2019

PROJECT NO. FS1976
DESIGNED BY: FQ
DRAWN BY: AEP
CHECKED BY: FQ
DATE MODIFIED:
DPW CHK:
SHEET: 11

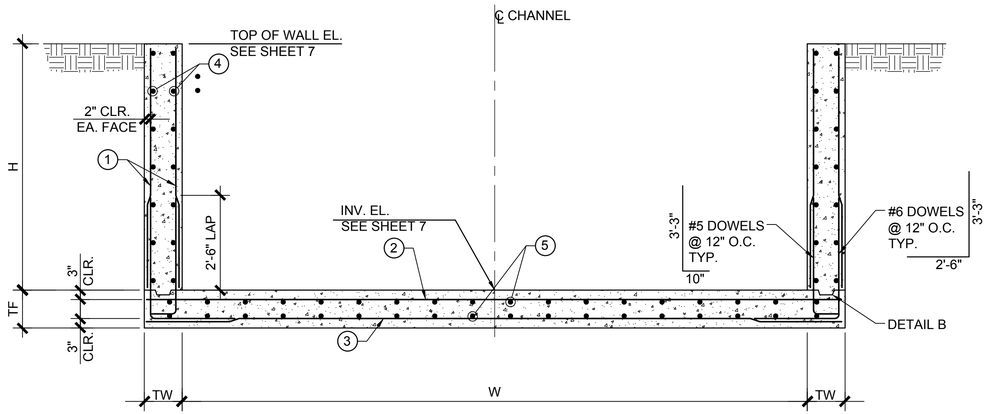

SECTION A-A

SCALE: NTS

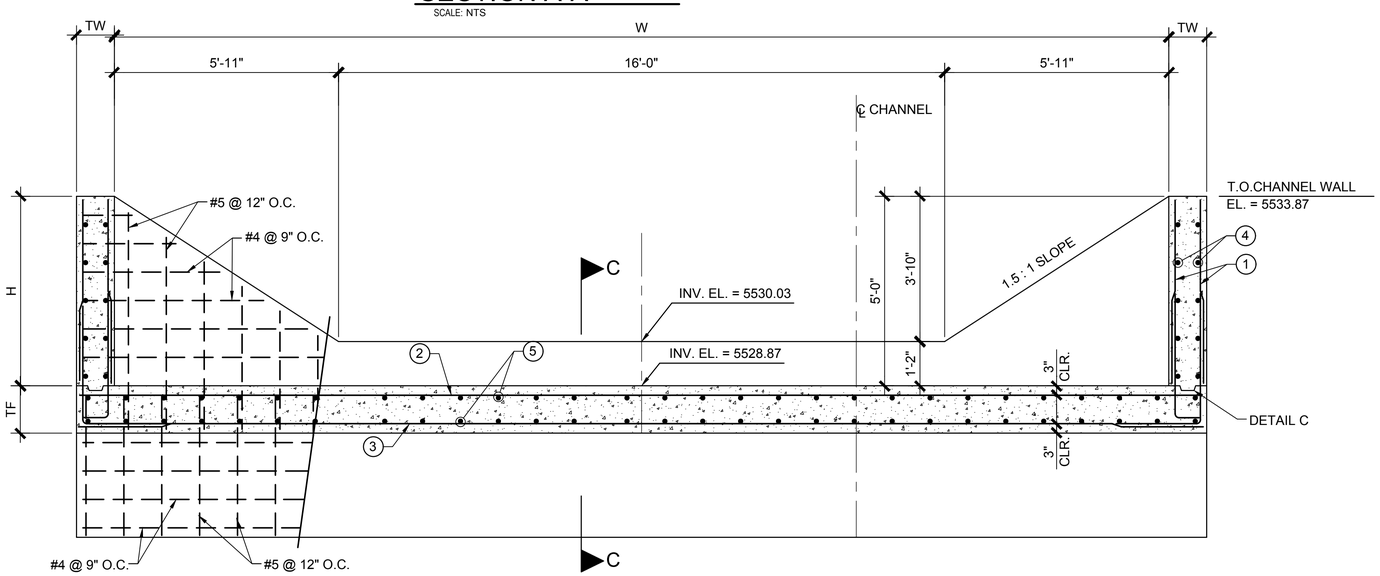

SECTION B-B

SCALE: NTS

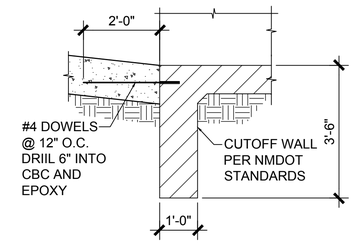

A DETAIL

SCALE: NTS

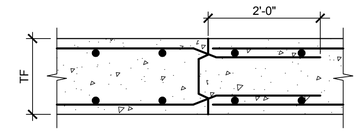

B DETAIL (CJ)

SCALE: NTS

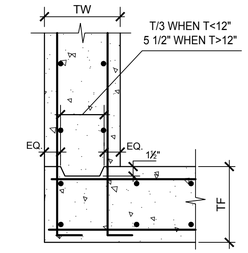

C DETAIL

SCALE: NTS

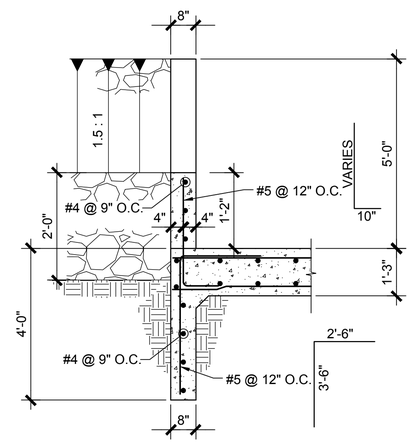

SECTION C-C

SCALE: NTS

REINFORCING TABLE

STATIONING	W (FT.)	H (FT.)	TW (IN.)	TF (IN.)	REINFORCING (1)	(2)	(3)	(4)	(5)
8 + 81	27'-10"	5'-0"	12"	15"	#5 @ 12"	#9 @ 9"	#6 @ 12"	#4 @ 12"	#5 @ 12"
9 + 20	16'-5 1/2"	5'-0"	12"	15" / 12"	#5 @ 12"	#9 @ 9" / #6 @ 9"	#6 @ 12"	#4 @ 12"	#5 @ 12" #4 @ 12"
9 + 48	16'-5 1/2"	5'-0"	12"	12"	#5 @ 12"	#6 @ 9"	#6 @ 12"	#4 @ 12"	#4 @ 12"
9 + 70	16'-5 1/2"	7'-5"	12"	12"	#5 @ 12"	#6 @ 9"	#6 @ 12"	#4 @ 12"	#4 @ 12"

NOTES:
Fy = 60ksi
fc = 4ksi @ 28 DAYS
ALLOWABLE BEARING
PRESSURE = 1.5ksf

RioRancho City of Vision

No.	DESCRIPTION	DATE	BY
7			
6			
5			
4			
3			
2			
1			

REVISIONS (OR CHANGE NOTICES)

Designed By: QUIROGA-PFEIFFER ENGINEERING CORPORATION

Designed For: CITY OF RIO RANCHO NEW MEXICO

LISBON AVENUE CULVERT REPLACEMENT

STRUCTURAL SECTIONS

FERNANDO O. QUIROGA NEW MEXICO 10646 REGISTERED PROFESSIONAL ENGINEER 09-03-2019

PROJECT NO. FS1976
DESIGNED BY: FQ
DRAWN BY: AEP
CHECKED BY: FQ
DATE MODIFIED:
DPW CHK:
SHEET: 12

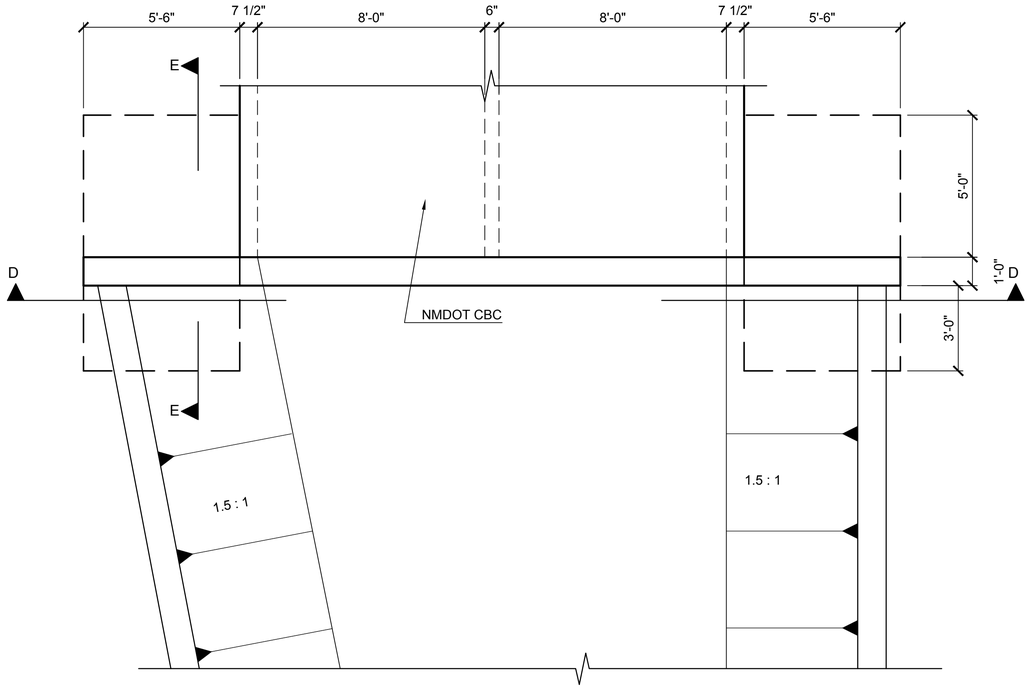

PLAN OF END OF CBC

SCALE: NTS

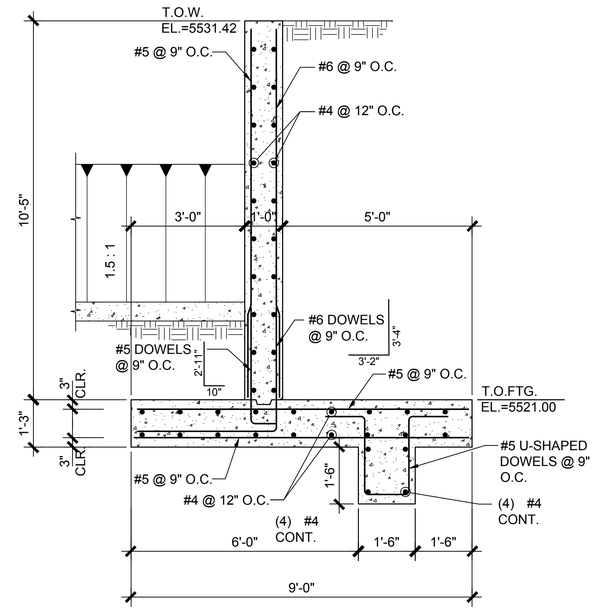

SECTION E-E

SCALE: NTS

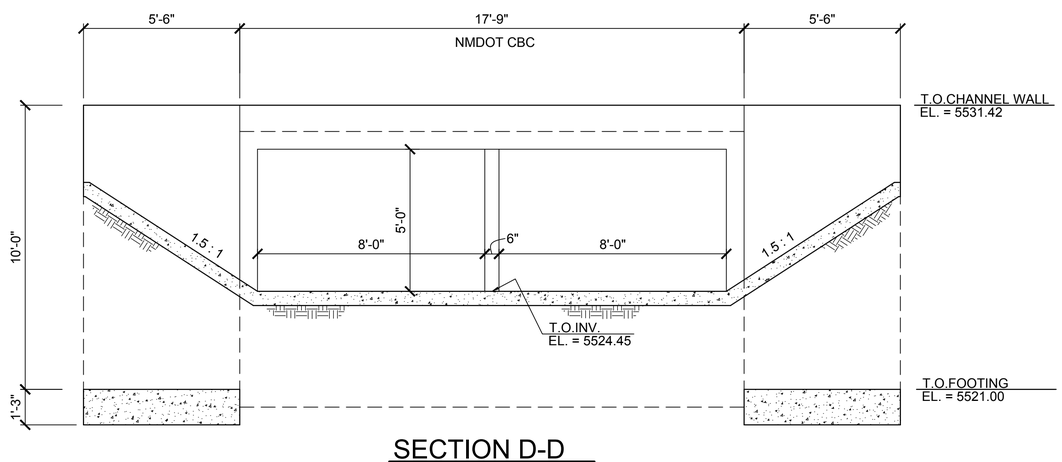

SECTION D-D

SCALE: NTS

RioRancho
City of Vision

No.	DESCRIPTION	DATE	BY
1			
2			
3			
4			
5			
6			
7			

REVISIONS (OR CHANGE NOTICES)

Designed By: QUIROGA-PFEIFFER ENGINEERING CORPORATION

Designed For: CITY OF RIO RANCHO NEW MEXICO

LISBON AVENUE
CULVERT REPLACEMENT

END OF NMDOT CBC
SECTIONS AND DETAILS

FERNANDO O. QUIROGA
N.M. MEXICO
10646
REGISTERED PROFESSIONAL ENGINEER
09-03-2019

PROJECT NO. FS1976
DESIGNED BY: FQ
DRAWN BY: AEP
CHECKED BY: FQ
DATE MODIFIED:
DPW CHK:
SHEET: 12A

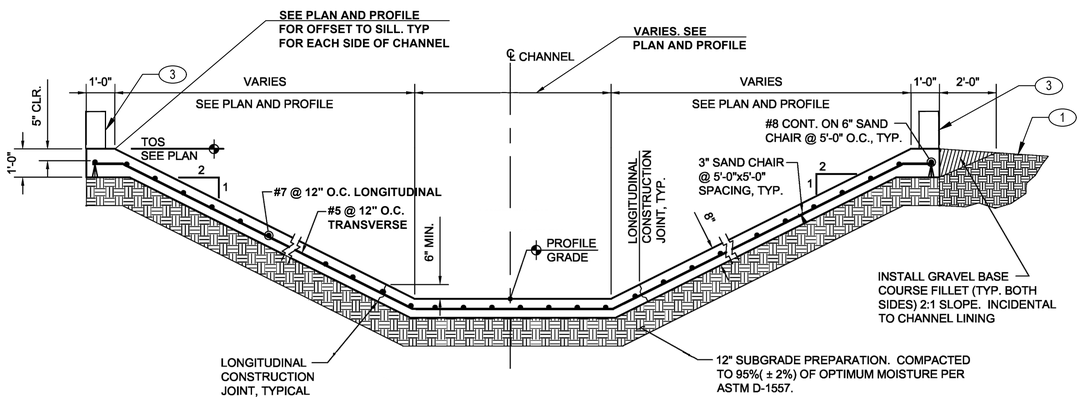

TYPICAL CONCRETE CHANNEL LINING

NOTES FOR CHANNEL CONSTRUCTION

1. CAST-IN-PLACE CONCRETE: CONCRETE SHALL BE IN ACCORDANCE WITH PROJECT SPECIFICATIONS. (f'c = 4000 psi MINIMUM). 3/4" CHAMFER ON ALL EXPOSED FORMED EDGES UNLESS NOTED OTHERWISE.
2. REINFORCING STEEL: STEEL REINFORCEMENT AND PLACEMENT SHALL BE IN ACCORDANCE WITH PROJECT SPECIFICATIONS AND SHALL CONFORM TO ASTM A615, GRADE 60. ALL LAP SPLICES SHALL BE CLASS "B" UNLESS NOTED OTHERWISE. REINFORCING STEEL SHALL BE INCIDENTAL TO CONCRETE BID ITEMS.
3. ALL EXPOSED CHANNEL SURFACES SHALL BE GIVEN A CLASS 3 FLOAT & TINE FINISH. TINE SHALL BE TRANSVERSE TO FLOW.
4. MINIMUM REBAR LAP LENGTH:
   #7 or less: 3'-6" MINIMUM
   #8 : 4'-6" MINIMUM
5. THE EARTH SIDE OF SILL WALLS SHALL BE WATERPROOFED AT IRRIGATED AREAS AND DAMP PROOFED AT ALL OTHER AREAS. WATERPROOFING SHALL BE CONWRAP BARRIER CS-212 AS MANUFACTURED BY CONCRETE SEALANTS, INC. (MEMBRANE THICKNESS 0.100 INCHES MINIMMUM) OR ENGINEER APPROVED EQUAL. DAMP PROOFING SHALL BE HYDROCIDE 700B OR ENGINEER APPROVED EQUAL.
6. ALL EXPOSED SURFACES OF THE CHANNEL SILL WALLS SHALL RECEIVE A "THOROCOAT" CLASS 4 FINISH. THE COLOR SHALL BE SIMILAR TO THE CHANNEL LINING AND SHALL BE APPROVED BY THE CITY OF RIO RANCHO. "THOROCOAT" SHALL BE APPLIED TO THE BACK OF WALLS 6 INCHES BELOW GRADE.

KEYED NOTES

1. NATIVE RE-VEGETATION. SEE CITY OF RIO RANCHO SPECIFICATION. GRAVEL MULCH IS REQUIRED FOR SLOPES GREATER THAN 6H:IV.
2. REMOVAL OF CONCRETE ADJACENT TO THE 2" SAWCUT WILL BE WITH A 30 LB., MAX. PHNEUMATIC HAMMER. IN THE EVENT OF DAMAGE TO THE CONCRETE TO REMAIN, THE CONTRACTOR SHALL RE SAW THE 2" JOINT AND REMOVE AND REPLACE THAT CONCRETE AT NO EXTRA COST TO THE OWNER.
3. SILL WALL PER DETAIL THIS SHEET. SEE PLAN AND PROFILES FOR ELEVATIONS.

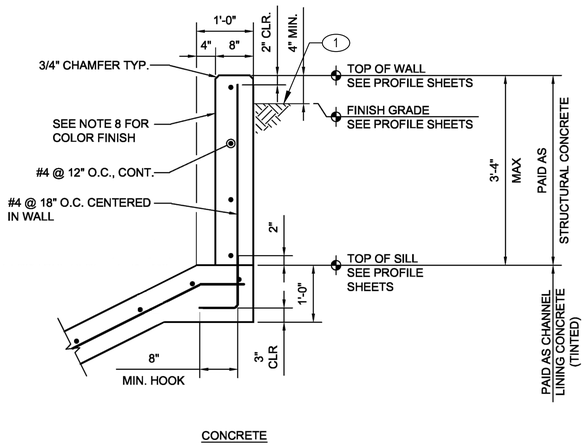

TYPICAL SILL WALL DETAIL

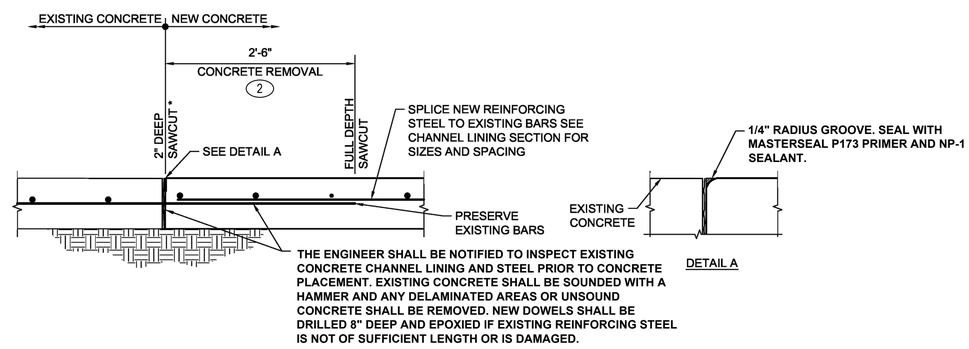

NEW TO EXISTING CHANNEL LINING CONSTRUCTION JOINT DETAIL

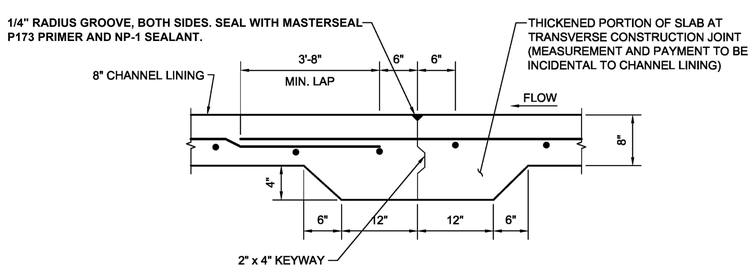

TYPICAL TRANSVERSE CONSTRUCTION JOINT DETAIL

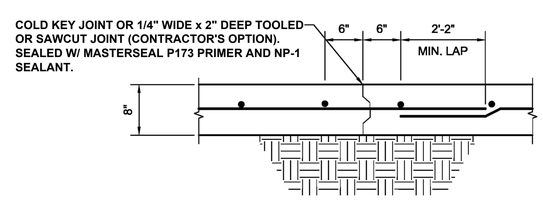

TYPICAL LONGITUDINAL CONSTRUCTION JOINT DETAIL

THIS SHEET NOT TO SCALE

RioRancho City of Vision

No.	DESCRIPTION	DATE	BY
1			
2			
3			
4			
5			
6			
7			

REVISIONS (OR CHANGE NOTICES)

Designed By: CONLEY ENGINEERING LLC, 3915 Coronado Blvd NE, Albuquerque, NM 87110, 505-331-1587

Designed For: CITY OF RIO RANCHO NEW MEXICO

LISBON AVENUE CULVERT REPLACEMENT

TRAPEZOIDAL CHANNEL DETAILS

PATRICK J. CONLEY, NEW MEXICO 10141, LICENSED PROFESSIONAL ENGINEER, 9/4/2019

PROJECT NO. FS1976
DESIGNED BY: PJC
DRAWN BY: CE LLC
CHECKED BY: PJC
DATE MODIFIED:
DPW CHK:
SHEET: 13

GENERAL NOTES:

- ALL WELDED AND CUT AREAS TO BE CLEANED THOROUGHLY WITH A WIRE BRUSH AND OR SAND BLAST AND REGALVANIZED.
- REGALVANIZING SHALL BE WITH SHERWIN WILLIAMS ZINC CLAD 7 PRIMER OR EQUAL.
- AFTER PRIMING, PAINT ALL PIPES, HINGES, ETC. WITH TWO (2) COATS OF OSHA SAFETY BLUE OR EQUAL.

CONSTRUCTION NOTES:

- 2" NOMINAL DIA. GALVANIZED PIPE, MIN. 3.65 LBS/FT.
- 2 ½" NOMINAL DIA. GALVANIZED PIPE, MIN. 5.79 LBS/FT.
- 4" NOMINAL DIA. GALVANIZED PIPE, MIN. 10.79 LBS/FT.

SIGN MATERIAL:

- 63 MIL THICK ALUMINUM WITH DIAMOND GRADE REFLECTIVITY.
- 12+ YEAR DURABILITY, MANUFACTURED WITH PREMIUM 3M INKS AND REFLECTIVE MATERIALS DEVELOPED FOR MUNICIPAL OUTDOOR TRAFFIC OR PARKING SIGNS.

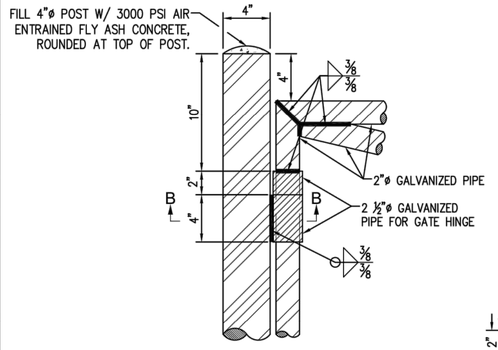

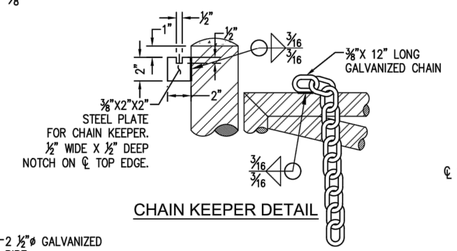

CHAIN KEEPER DETAIL

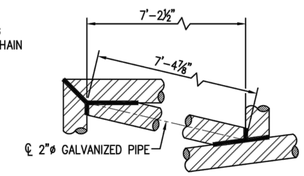

CONNECTION DETAIL

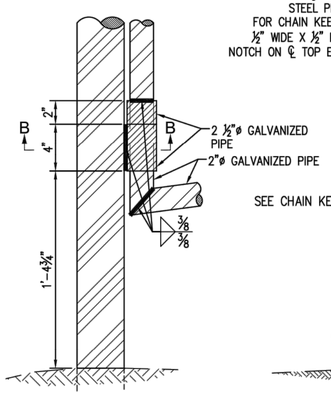

HINGE DETAIL

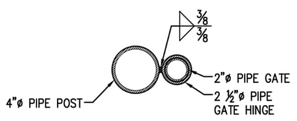

SECTION B-B

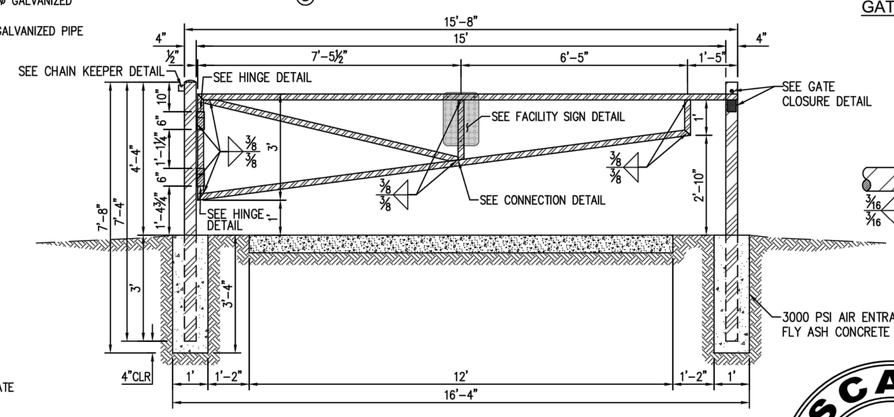

MAINTENANCE ACCESS GATE DETAIL

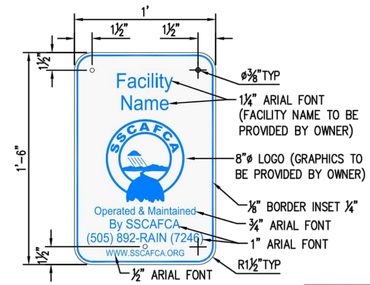

FACILITY SIGN DETAIL

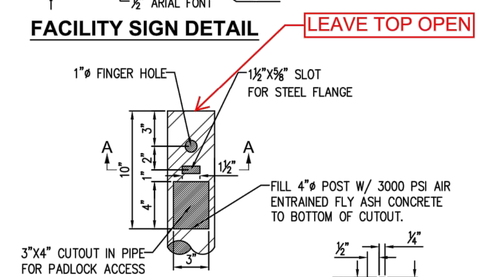

GATE CLOSURE DETAIL

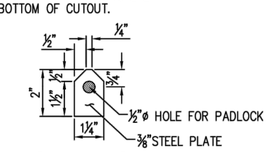

FLANGE ENLARGEMENT

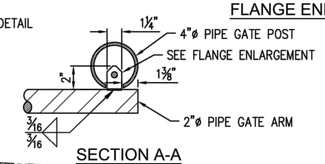

SECTION A-A

Southern Sandoval County Arroyo Flood Control Authority

SSCAFCA STANDARD MAINTENANCE ACCESS GATE

SSCAFCA MAINTENANCE GATE DETAIL.DWG February 14, 2019

THIS SHEET NOT TO SCALE

2/14/2019 2:56 PM – Kathy Fournier
G:\SSCAFCA_Project_Files_SSCAFCA Standard Drawings\AutoCAD\Production Drawings\Standard Drawings\Vitrascape\SSCAFCA MAINTENANCE GATE DETAIL.dwg

RioRancho City of Vision

No.	DESCRIPTION	DATE	BY
1			
2			
3			
4			
5			
6			
7			

REVISIONS (OR CHANGE NOTICES)

Designed By: CONLEY ENGINEERING LLC 3915 Coronado Blvd NE Albuquerque, NM 87110 505-331-1587

Designed For: CITY OF RIO RANCHO NEW MEXICO

LISBON AVENUE CULVERT REPLACEMENT

SSCAFCA STANDARD MAINTENANCE ACCESS GATE

SSCAFCA STANDARD DRAWING

PROJECT NO. FS1976
DESIGNED BY: PJC
DRAWN BY: CE LLC
CHECKED BY: PJC
DATE MODIFIED:
DPW CHK:
SHEET: 14

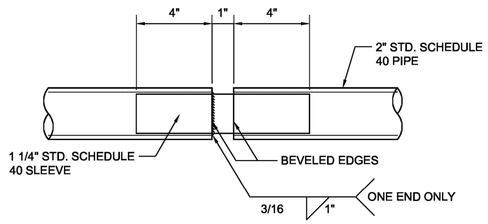

FOR RAILING LONGER THAN 50'-0", INSTALL EXPANSION JOINTS EQUALLY SPACED BUT NOT MORE THAN 40'-0" O.C. ON ALL HORIZONTAL RAILS.

TYPICAL RAILING EXPANSION JOINT

N.T.S.

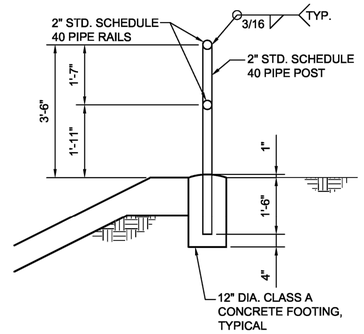

TYPICAL SECTION

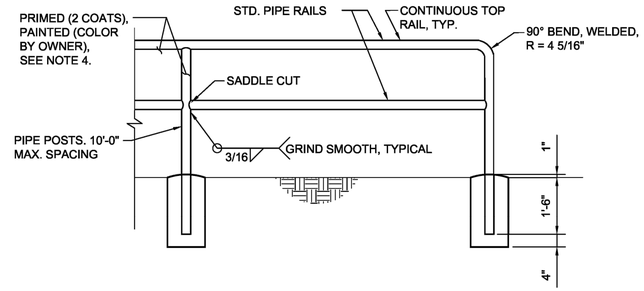

TYPICAL FRAME ELVEVATION

TYPICAL PIPE RAIL MOUNTED ON GRADE

N.T.S.

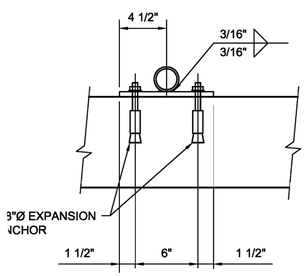

MOUNT - PLAN

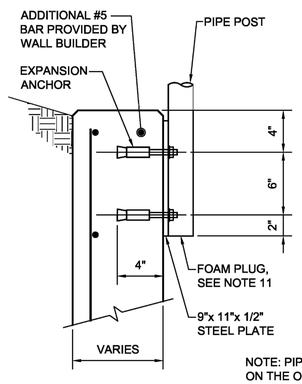

MOUNT - ELEVATION

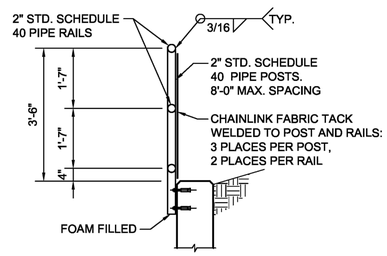

NOTE: PIPE RAIL FENCE IS TO BE INSTALLED ON THE OUTSIDE FACE OF WALL.

TYPICAL SECTION

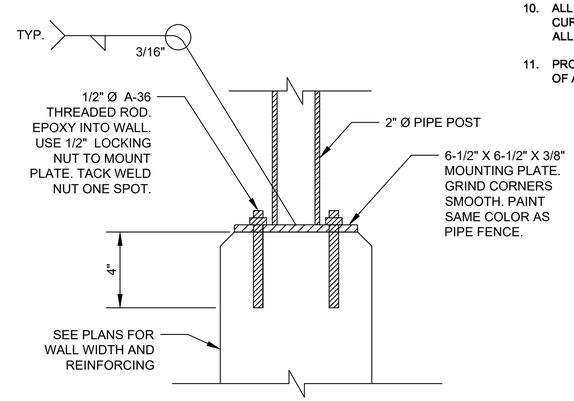

SECTION

N.T.S.

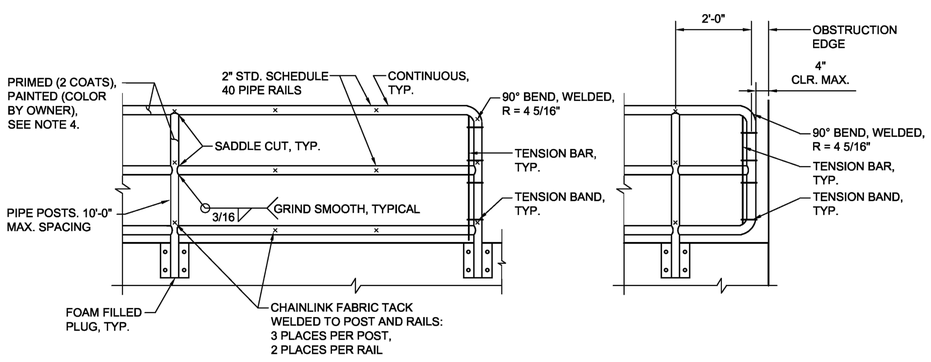

TYPICAL FRAME ELVEVATION

TYPICAL END FRAME AT OBSTRUCTION

N.T.S.

TYPICAL PIPE RAIL W/ CHAINLINK FENCE MOUNTED ON CONCRETE WALL

N.T.S.

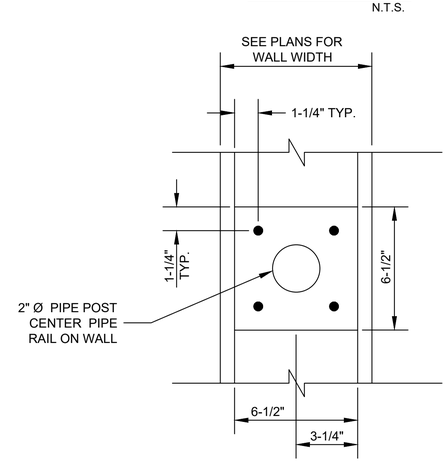

PLAN

N.T.S.

FLUSH MOUNT

N.T.S.

HEIGHT OF RAILING PER DETAIL FOR GRADE MOUNT ABOVE

NOTES FOR PIPE RAILS

1. WORKMANSHIP AND MATERIALS SHALL CONFORM TO THE NEW MEXICO DEPARTMENT OF TRANSPORTATION STANDARD SPECIFICATIONS FOR HIGHWAY AND BRIDGE CONSTRUCTION AND SUPPLEMENTAL SPECIFICATIONS, 2007 EDITION.
2. ALL PIPE SHALL BE 2" SCHEDULE 40 STEEL PIPE AND CONFORM WITH ASTM A53 GRADE B. THE TOP RAIL SHALL BE CONTINUOUS, WITH POSTS, MIDDLE RAIL AND BOTTOM RAILS SADDLE CUT, WELDED ALL AROUND AND GRIND BEFORE PAINTING.
3. CHAINLINK SHALL CONFORM TO THE REQUIREMENTS OF AASHTO M181, WITH A CLASS C COATING OR BETTER. THE WIRE SHALL BE GALVANIZED, 9 GAUGE, WITH A 2" MESH. SELVAGE ON TOP AND BOTTOM TO BE KNUCKLE/KNUCKLE. THE CHAINLINK SHALL BE TACK WELDED AT 3 PLACES PER POST AND 2 PLACES PER RAIL.
4. **COLOR OF FINAL COATING TO BE OSHA SAFETY BLUE OR EQUAL.**
5. GALVANIZED TENSION BARS AND CLAMPS SHALL BE INSTALLED ON ALL ENDS AND AT ALL CORNERS AND ANGLE POINTS WHERE CHAINLINK IS REQUIRED.
6. NEW MATERIAL SHALL BE USED THROUGHOUT.
7. ALL ANCHOR BOLTS SHALL BE 5/8" DIAMETER EXPANSION ANCHOR WITH A MINIMUM OF 4" EMBEDMENT. PROVIDE HILTI KWIK BOLT II EXPANSION ANCHOR (KB II) OR ENGINEER APPROVED EQUAL. PROVIDE FLAT WASHERS BETWEEN ALL NUTS AND BASE PLATES.
8. BOLTS SHALL CONFORM TO ASTM A325, WASHERS SHALL BE INSTALLED UNDER NUTS OF FASTENERS.
9. BASE PLATES SHALL CONFORM TO ASTM A36. TUBE STEEL SHALL CONFORM TO ASTM A500 GRADE B.
10. ALL WELDING OR GAS CUTTING SHALL BE IN ACCORDANCE WITH THE CURRENT STANDARDS OF THE AMERICAN WELDING SOCIETY D1.1-2000. ALL WELDING SHALL USE E70XX ELECTRODES.
11. PROVIDE EXPANDING POLYSTYRENE FOAM PLUG (2" MIN.) AT THE BASE OF ALL POSTS ON THE WALL MOUNTED PIPE RAIL.

THIS SHEET NOT TO SCALE

RioRancho City of Vision

No.	DESCRIPTION	DATE	BY
1			
2			
3			
4			
5			
6			
7			

REVISIONS (OR CHANGE NOTICES)

Designed By: CONLEY ENGINEERING LLC, 3915 Coronado Blvd NE, Albuquerque, NM 87110, 505-331-1587

Designed For: CITY OF RIO RANCHO NEW MEXICO

LISBON AVENUE CULVERT REPLACEMENT

PIPE RAIL DETAILS

PATRICK J. CONLEY, NEW MEXICO, 10141, LICENSED PROFESSIONAL ENGINEER

PROJECT NO. FS1976
DESIGNED BY: PJC
DRAWN BY: CE LLC
CHECKED BY: PJC
DATE MODIFIED:
DPW CHK:
SHEET: 15

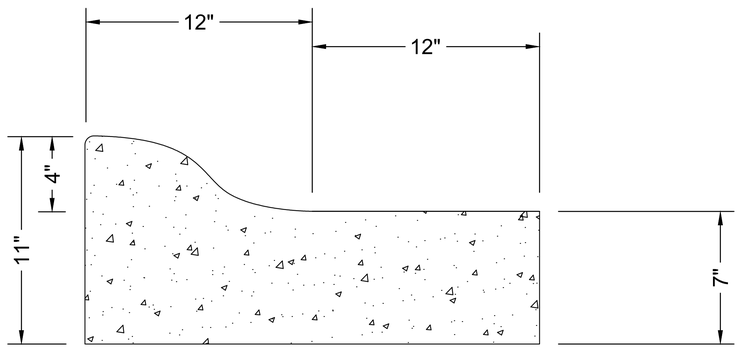

SPILL CURB AND GUTTER

NOT TO SCALE

THIS SHEET NOT TO SCALE

RioRancho
City of Vision

No.	DESCRIPTION	DATE	BY
1			
2			
3			
4			
5			
6			
7			

REVISIONS (OR CHANGE NOTICES)

Designed By:
CONLEY ENGINEERING LLC
3915 Carlisle Blvd NE Albuquerque, NM 87110 505-331-1587

Designed For:
CITY OF RIO RANCHO
NEW MEXICO

LISBON AVENUE
CULVERT REPLACEMENT

ROADWAY DETAILS

PATRICK J. CONLEY
NEW MEXICO
10141
PROFESSIONAL ENGINEER
9/4/2019

PROJECT NO. FS1976
DESIGNED BY: PJC
DRAWN BY: CE LLC
CHECKED BY: PJC
DATE MODIFIED: --
DPW CHK: --
SHEET: 16

NOTE: REINFORCING FOR CBC AND CBC HEADWALL NOT SHOWN IN SECTIONS FOR CLARITY. SEE SHEETS 20-23.

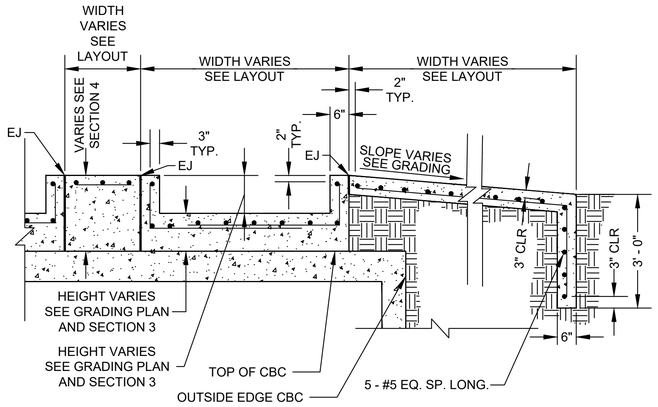

1 9 17 SECTION: RUNDOWN
(MIRRORED OPPOSITE SIDE)
NOT TO SCALE

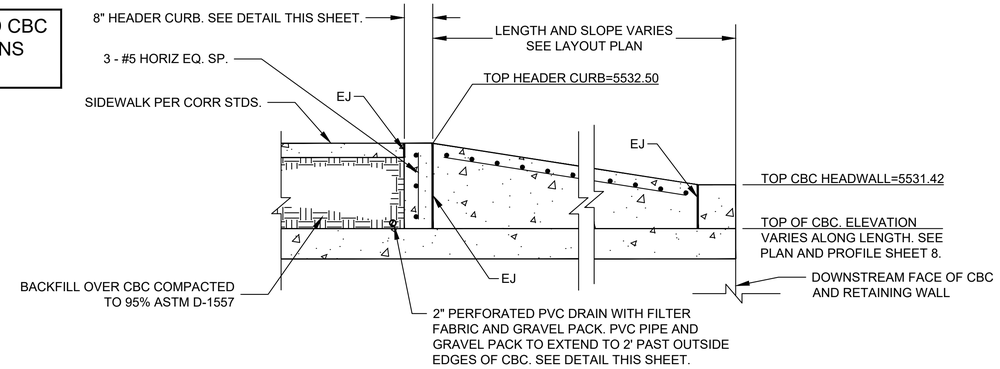

4 9 17 SECTION: CONCRETE FILL
NOT TO SCALE

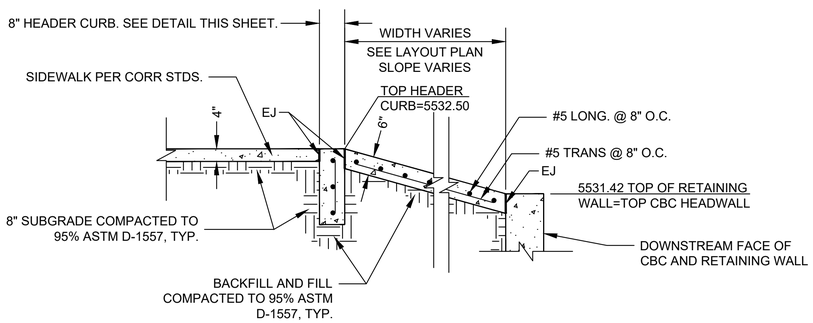

2 9 17 SECTION: SLOPE PAVING
NOT TO SCALE

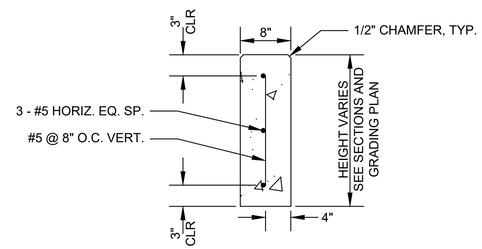

8' HEADER CURB DETAIL
NOT TO SCALE

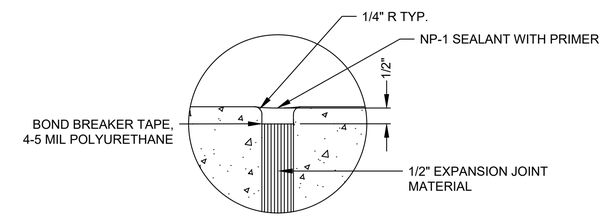

EXPANSION JOINT
NOT TO SCALE

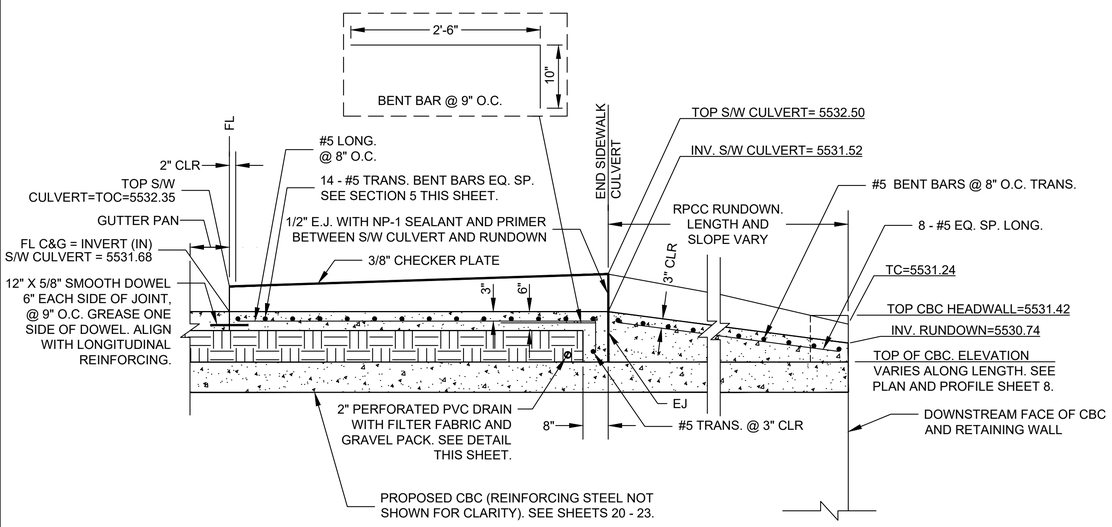

3 9 17 SECTION: SIDEWALK CULVERT AND RUNDOWN
NOT TO SCALE

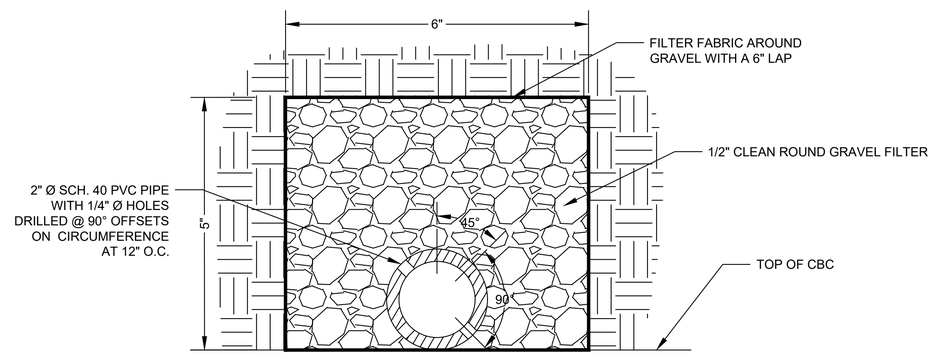

2" PERFORATED PVC DRAIN
NOT TO SCALE

RioRancho City of Vision

No.	DESCRIPTION	DATE	BY
1			
2			
3			
4			
5			
6			
7			

REVISIONS (OR CHANGE NOTICES)

Designed By: CONLEY ENGINEERING LLC, 3913 Cordial Blvd NE, Albuquerque, NM 87107, 505-331-1387

Designed For: CITY OF RIO RANCHO NEW MEXICO

LISBON AVENUE CULVERT REPLACEMENT

LISBON AVENUE ROADWAY DETAILS

LICENSED PROFESSIONAL ENGINEER PATRICK J. CONLEY NEW MEXICO 10141 4/27/2020

PROJECT NO.	FS1976
DESIGNED BY:	PJC
DRAWN BY:	CE LLC
CHECKED BY:	PJC
DATE MODIFIED:	
DPW CHK:	
SHEET:	17

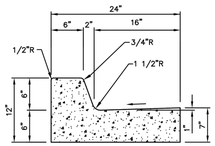

STANDARD CURB AND GUTTER

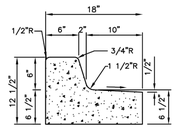

MEDIAN CURB AND GUTTER

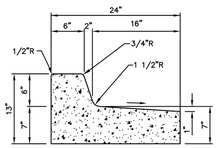

SPILL CURB AND GUTTER

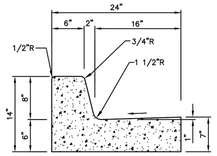

8" CURB AND GUTTER
FOR COLLECTOR AND ARTERIAL STREETS ONLY. SEE NOTE 7.

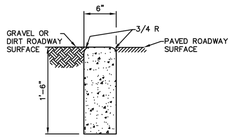

CUTOFF WALL
USE FOR TRANSITION TO UNPAVED ROAD, SEE NOTE 7.

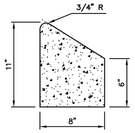

ROUND-ABOUT CURB

GENERAL NOTES:

1. ANY DEVIATIONS FROM THESE STANDARDS SHALL BE SUBMITTED TO THE CITY FOR PRIOR APPROVAL.
2. ALL WORK IN PUBLIC RIGHT-OF-WAY SHALL BE CONSTRUCTED BY A LICENSED CONTRACTOR AND REQUIRES PERMIT AND APPROVAL BY THE CITY.
3. SUBGRADE SHALL BE COMPACTED TO 95% ASTM D 1557, MIN.
4. CURB AND GUTTER SHALL BE PORTLAND CEMENT CONCRETE. PORTLAND CEMENT CONCRETE SHALL BE 3000 PSI @ 28 DAYS. AIR ENTRAINMENT SHALL BE 5% MINIMUM TO 9% MAXIMUM. A CLASS F FLY ASH ADDITIVE IS ALLOWED UP TO 20% BY WEIGHT.
5. FOR CONCRETE CURB AND GUTTER CONSTRUCT TRANSVERSE JOINTS AS FOLLOWS:
   - TOOLED CONTRACTION JOINTS AT 5' INTERVALS
   - 1/2" PRE-MOLDED BITUMINOUS EXPANSION JOINTS AT 15' INTERVALS.
6. DIMENSIONS AT ROUNDED CORNERS MEASURED TO INTERSECTION OF STRAIGHT LINES.
7. 8" CURB AND GUTTER AND CUTOFF WALL IS NOT FOR USE IN NEW RESIDENTIAL DEVELOPMENT. USE MUST BE PREAPPROVED BY THE CITY.
8. ASPHALT PLACEMENT SHALL BE EVEN WITH THE LIP OF GUTTER, BUT IN NO CASE SHALL IT EXCEED 1/4". ASPHALT PLACED LOWER THAN LIP OF GUTTER SHALL BE CORRECTED AT CONTRACTOR'S EXPENSE.

DATE MODIFIED: OCT 10, 2014

City of Rio Rancho
Department of Public Works

CURB AND GUTTER

DWG. NO. CG-01 OCT 2, 2008

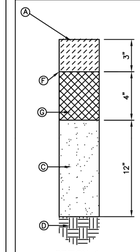

OPTION 1
RESIDENTIAL STREET
NTS

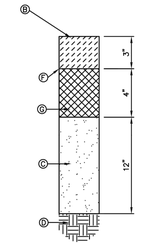

OPTION 2
RESIDENTIAL STREET
NTS

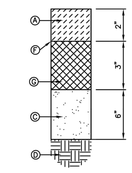

PEDESTRIAN TRAIL
OR PARKING LOT
NTS

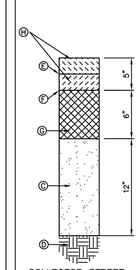

COLLECTOR STREET
NTS

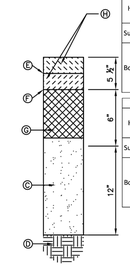

ARTERIAL STREET
NTS

KEYED NOTES:

- (A) ASPHALT CONCRETE TYPE SP-IV, PLACED IN LIFTS AS SHOWN
- (B) ASPHALT CONCRETE TYPE SP-III, PLACED IN LIFTS AS SHOWN.
- (C) SUBGRADE PREPARATION, 95% MIN. COMPACTION PER ASTM D 1557.
- (D) COMPACTED FILL OR UNDISTURBED EARTH, 90% MIN. COMPACTION PER ASTM D 1557.
- (E) TACK COAT, AS REQUIRED BY THE ENGINEER.
- (F) PRIME COAT, AS REQUIRED BY THE ENGINEER, OR BASE COURSE SHALL BE MOISTURE CONTROLLED AT COMPACTION MOISTURE RANGE.
- (G) AGGREGATE BASE COURSE.
- (H) ASPHALT MATERIAL AND PG BINDER TO BE IN ACCORDANCE WITH TABLE 1A OR 1B. CONSTRUCTION PLANS WILL SPECIFY. ASPHALT LIFT THICKNESS SHALL COMPLY WITH THE STANDARDS SET HERETO.

Table 1A: New Construction or Complete Reconstruction

		20-Year Traffic ESAls			
HMA Layer	Material	< 10 Million		≥ 10 Million	
		< 5.5" New HMA	≥ 5.5" New HMA	< 8" New HMA	≥ 8" New HMA
Surface Layer	HMA	SP-III or SP-IV	SP-IV at 3" thick	SP-II or SP-III	SP-III at 5" thick
	PG Binder	PG 64-22 Adjusted for ESALs and Traffic Speed			
Bottom Layer	HMA	Same SP Material as Surface	SP-III for remainder of thickness	Same SP Material as Surface	SP-II for remainder of thickness
	PG Binder	Same as Surface	64-22; No Adjustment	Same as Surface	64-22; No Adjustment

Table 1B: Rehabilitation or Overlay Construction

		20-Year Traffic ESAls			
HMA Layer	Material	< 10 Million		≥ 10 Million	
		< 5.5" New HMA	≥ 5.5" New HMA	< 8" New HMA	≥ 8" New HMA
Surface Layer	HMA	SP-III or SP-IV	SP-IV at 3" thick	SP-II or SP-III	SP-III at 5" thick
	PG Binder	PG 64-22 Adjusted for ESALs and Traffic Speed			
Bottom Layer	HMA	Same SP Material as Surface	SP-III for remainder of thickness	Same SP Material as Surface	SP-II for remainder of thickness
	PG Binder	Same PG Binder as Surface			

HMA Type	Lift Thickness (Inches)	
	Minimum	Maximum
SP-II	3	3.5
SP-III	2.5	3.5
SP-IV	1.5	3

DATE MODIFIED: NOV 06, 2017

GENERAL NOTES:

1. ANY DEVIATIONS FROM THESE STANDARDS SHALL BE SUBMITTED TO THE CITY FOR PRIOR APPROVAL.
2. ALL WORK IN PUBLIC RIGHT-OF-WAY SHALL BE CONSTRUCTED BY A LICENSED CONTRACTOR AND REQUIRES PERMIT AND APPROVAL BY THE CITY.
3. IN LIEU OF USING THE MINIMUM PAVEMENT DESIGN PROVIDED ON PS-01, A PROJECT/SITE SPECIFIC PAVEMENT DESIGN, INCLUDING BASE COURSE, MAY BE SUBMITTED FOR APPROVAL BY THE CITY. DESIGN MUST CONFORM TO THE AASHTO GUIDE FOR DESIGN OF PAVEMENT STRUCTURES PROCEDURE, 1993 (OR CURRENT EDITION IF APPLICABLE), USING A MINIMUM OF 10 ESALs. NOMOGRAPHS SHALL NOT BE USED.
4. AN ASPHALT CERT LETTER SHALL BE PROVIDED TO THE CITY BEFORE ANY PAVING BEGINS. THIS CERT. MUST REFERENCE AN APPROVED/CURRENT MIX DESIGN FROM THE NMDOT. PLEASE STATE CLEARLY THE SML MIX DESIGN NUMBER & NMDOT LAB NUMBER.
5. THE ASPHALT BINDER SHALL BE PG 64-22 IN COMPLIANCE WITH APPENDIX A OF THE 2008 NMDOT PAVEMENT DESIGN DIRECTIVE. IT MAY BE ADJUSTED BASED ON TABLE 1A OR 1B AND THE 20-YEAR DESIGN ESALS IN ACCORDANCE WITH TABLE A-7 BELOW.

Table A-7: PG Base Grade Modification

20-Year Design ESALs (Millions)	Adjustments to PG Base Grade Binder[1]		
	Traffic Loading Rate		
	Standing[2]	Slow[3]	Standard[4]
< 0.3	1	-	-
0.3 to < 3	2	1	-
3 to < 10	2	1	-
> 10	2	1	1

1. Increase the high end temperature grade by the number of grade(s) indicated (one grade is equivalent to 6°C)
2. Average traffic speed is less than 15 mph.
3. The average traffic speed ranges from 15 mph to less than 45 mph.
4. The average traffic speed is 45 mph or greater.

City of Rio Rancho
Department of Public Works

PAVEMENT SECTIONS

DWG. NO. PS-01 MAY 22, 2008

THIS SHEET NOT TO SCALE

RioRancho
City of Vision

No.	DESCRIPTION	DATE	BY
7			
6			
5			
4			
3			
2			
1			

REVISIONS (OR CHANGE NOTICES)

Designed By:
CONLEY ENGINEERING LLC
3915 Coronado Blvd NE Albuquerque, NM 87110 505-331-1587

Designed For:
CITY OF RIO RANCHO
NEW MEXICO

LISBON AVENUE
CULVERT REPLACEMENT

ROADWAY DETAILS

CORR PWD
STANDARD
DRAWINGS

PROJECT NO. FS1976
DESIGNED BY: --
DRAWN BY: --
CHECKED BY: --
DATE MODIFIED: --
DPW CHK: --
SHEET: 18

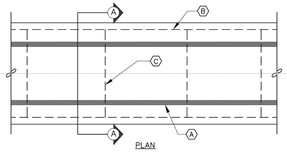

PLAN
CONCRETE ENCASEMENT

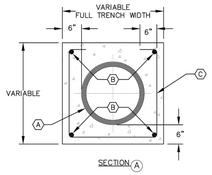

SECTION A

GENERAL NOTES:

1. WHERE A WATER LINE PASSES BENEATH, OR LESS THAN 18" ABOVE AN EXISTING SANITARY SEWER LINE OR RECYCLED WATER LINE, THE WATER LINE SHALL BE ENCASED IN CONCRETE, 6" THICK MEASURED FROM THE OUTSIDE WALL OF THE PIPE, AS DETAILED, FOR AT LEAST 10' ON EACH SIDE OF THE WATER LINE, OR THE SANITARY SEWER LINE OR RECYCLED WATER LINE SHALL BE AMERICAN WATER WORKS ASSOCIATION C-900 OR C-905 POLYVINYL CHLORIDE PIPE WITH PRESSURE-TYPE JOINTS FOR AT LEAST 10' ON EACH SIDE OF THE WATER LINE. THIS SHALL ALSO APPLY WHERE A PARALLEL WATER LINE IS LESS THAN 10' HORIZONTALLY AND LESS THAN 18" ABOVE THE SANITARY SEWER LINE OR RECYCLED WATER LINE.

KEYNOTES:

(A) SANITARY SEWER LINE AS SHOWN ON PLANS

(B) 4-NUMBER 4 BARS, CONTINUOUS WITH MINIMUM 3" CLEARANCE TO OUTSIDE EDGE OF CONCRETE.

(C) STIRRUPS WITH NUMBER 4 BARS, AT 36" ON CENTER WITH MINIMUM 3" CLEARANCE TO OUTSIDE EDGE OF CONCRETE.

DATE MODIFIED: APRIL 2016

City of Rio Rancho
Department of Public Works

PIPE ENCASEMENT

DWG. NO. S-05 APRIL 22, 2016

EMBEDMENT SOILS CLASSIFICTIONS		
SOILS CLASS	SOIL TYPE	DESCRIPTION
CLASS I SOILS*		MANUFACTURED ANGULAR, GRANULAR MATERIAL, 1/4 TO 1 1/2 INCHES (6 TO 40 MM) SIZE, INCLUDING MATERIALS HAVING A REGIONAL SIGNIFICANCE SUCH AS CRUSHED STONE OR ROCK, BROKEN CORAL, CRUSHED SLAG, CINDERS, OR CRUSHED SHELLS, COMPLYING TO THE REQUIREMENTS OF CLASS II SOILS.
CLASS II SOILS**	GW	WELL-GRADED GRAVELS AND GRAVEL-SAND MIXTURES, LITTLE OR NO FINES. 50% OR MORE COARSE FRACTION RETAINED ON NO. 4 SIEVE. MORE THAN 95% RETAINED ON NO. 200 SIEVE. CLEAN.
CLASS II SOILS**	GP	POORLY GRADED GRAVELS AND GRAVEL-SAND MIXTURES, LITTLE OR NO FINES. 50% OR MORE COARSE FRACTION RETAINED ON NO. 4 SIEVE. MORE THAN 95% RETAINED ON NO. 200 SIEVE. CLEAN.
CLASS II SOILS** 50%	SW	WELL GRADED SANDS AND GRAVELLY SANDS, LITTLE OR NO FINES. MORE THAN OF COARSE FRACTION PASSES NO. 4 SIEVE. MORE THAN 95% RETAINED ON NO. 200 SIEVE. CLEAN.
CLASS II SOILS**	SP	POORLY GRADED SANDS AND GRAVELLY SANDS, LITTLE OR NO FINES. MORE THAN 50% OF COARSE FRACTION PASSES NO. 4 SIEVE. MORE THAN 95% RETAINED ON NO. 200 SIEVE. CLEAN.

* SOILS ARE AS DEFINED IN ASTM D2487, EXCEPT FOR CLASS I SOILS WHICH ARE DEFINED IN ASTM D2321.
** IN ACCORDANCE WITH ASTM D2487, LESS THAN 5% PASSES NO. 200 SIEVE.
FROM TABLE 701.3.A. NEW MEXICO STANDARD SPECIFICATIONS FOR PUBLIC WORKS CONSTRUCTION, 2006 EDITION

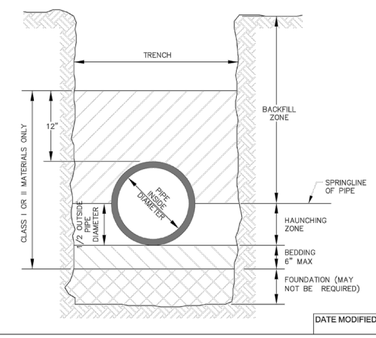

GENERAL CONSTRUCTION NOTES:

1. BEDDING MATERIALS SHALL BE CLASSED AS DEFINED IN AMERICAN SOCIETY FOR TESTING AND MATERIALS STANDARD D2321. REFER TO TABLE 701.3.A OF THE CITY OF RIO RANCHO STANDARD SPECIFICATIONS, AS AMENDED FOR SOIL CLASSIFICATION DESCRIPTIONS.
2. COMPACTION TESTING SHALL BE TAKEN AT SPRINGLINE OF PIPE.
3. COMPACTION TESTING SHALL BE TAKEN AT INITIAL BACKFILL ZONE.
4. FOR PAVED AREAS, COMPACTION SHALL BE 95% STANDARD MODIFIED PROCTOR PER AMERICAN SOCIETY FOR TESTING AND MATERIALS STANDARD D1557.
5. FOR UNPAVED AREAS, COMPACTION SHALL BE 90% STANDARD MODIFIED PROCTOR PER AMERICAN SOCIETY FOR TESTING AND MATERIALS STANDARD D1557.

DATE MODIFIED: OCTOBER 2017

City of Rio Rancho
Department of Public Works

PIPE BEDDING

DWG. NO. W-07 APRIL 22, 2016

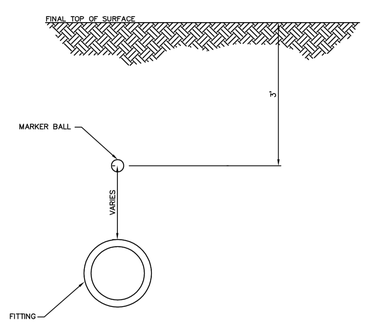

GENERAL NOTES:

1. MARKER BALL PLACEMENT LOCATIONS SHALL BE DENOTED BY THE ENGINEER OF RECORD ON THE PLANS. THESE LOCATIONS SHALL BE AS SPECIFIED WITHIN THE CITY OF RIO RANCHO'S DEVELOPMENT PROCESS MANUAL, CHAPTER 8.7. THE CONTRACTOR SHALL ENSURE THAT ALL MARKER BALLS ARE PLACED IN ACCORDANCE WITH THE PLANS AND/OR AS DIRECTED BY THE CITY'S PROJECT MANAGER.
2. MARKER BALLS SHALL BE PROGRAMMABLE. PROGRAMMING WILL BE COMPLETED BY THE CITY.
3. MARKER BALLS WILL BE PURCHASED AND INSTALLED BY THE CONTRACTOR/DEVELOPER.
4. BEFORE CONSTRUCTION, THE CONTRACTOR SHALL PROVIDE A SCHEDULE WITH APPLICABLE MARKER BALL INFORMATION TO THE CITY.
5. THE MARKER BALL IDENTIFICATION NUMBER TAGS SHALL BE INCLUDED WITHIN THE RECORD DRAWINGS.

DATE MODIFIED: DEC 12, 2014

City of Rio Rancho
Department of Public Works

MARKER BALL DETAIL

DWG. NO. GU-01 NOV 2, 2012

THIS SHEET NOT TO SCALE

RioRancho City of Vision

No.	DESCRIPTION	DATE	BY
7			
6			
5			
4			
3			
2			
1			

REVISIONS (OR CHANGE NOTICES)

Designed By: CONLEY ENGINEERING LLC
3915 Carlisle Blvd NE Albuquerque, NM 87110 505-331-1587

Designed For: CITY OF RIO RANCHO NEW MEXICO

LISBON AVENUE CULVERT REPLACEMENT

UTILITY DETAILS

CORR PWD STANDARD DRAWINGS

PROJECT NO. FS1976
DESIGNED BY: --
DRAWN BY: --
CHECKED BY: --
DATE MODIFIED: --
DPW CHK: --
SHEET: 19

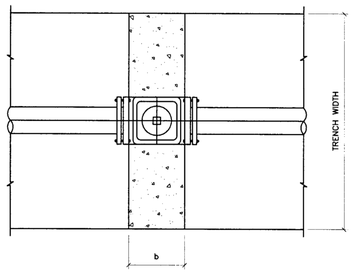

PLAN

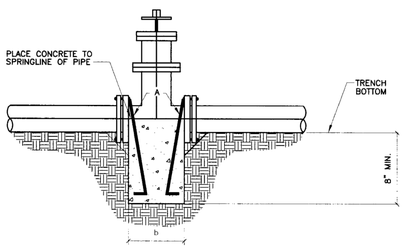

SECTION

GENERAL NOTES:

1 THE ENGINEER SHALL PROVIDE DESIGN FOR ALL VALVES GREATER THAN 12".

2 ALL THRUST CONTROL BY RESTRAINED JOINTS ONLY UNLESS OTHERWISE DIRECTED BY ENGINEER.

3 USE FOR VALVE INSERTION INTO EXISTING LINES ONLY.

4 CONCRETE USED FOR VALVE ANCHORAGE PER SEC. 101 HYDRAULIC STRUCTURAL CONCRETE, f'c=4000 psi @ 28 DAYS.

CONSTRUCTION NOTES:

A TWO NO. 4 BARS FOR VALVE STRAPS WITH 3" HOOKS. HOOKS TO BE EMBEDDED BELOW BOTTOM OF PIPE. BARS TO BE COATED WITH BITUMINOUS MATERIAL TO PREVENT CORROSION.

PIPE SIZE	DIM. b
6"	8"
8"	9"
10"	10"
12"	10"

REVISIONS	NM APWA
	WATER WATER VALVE INSERTION ANCHORAGE DWG. 2333 FEB. 2006

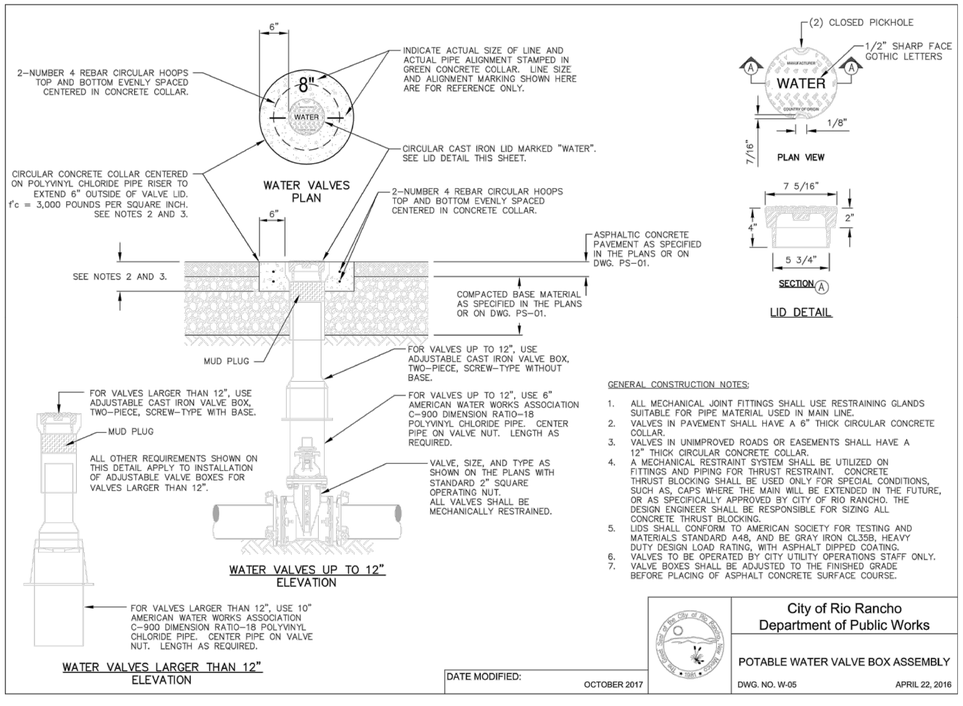

LID DETAIL

GENERAL CONSTRUCTION NOTES:

1. ALL MECHANICAL JOINT FITTINGS SHALL USE RESTRAINING GLANDS SUITABLE FOR PIPE MATERIAL USED IN MAIN LINE.
2. VALVES IN PAVEMENT SHALL HAVE A 6" THICK CIRCULAR CONCRETE COLLAR.
3. VALVES IN UNIMPROVED ROADS OR EASEMENTS SHALL HAVE A 12" THICK CIRCULAR CONCRETE COLLAR.
4. A MECHANICAL RESTRAINT SYSTEM SHALL BE UTILIZED ON FITTINGS AND PIPING FOR THRUST RESTRAINT. CONCRETE THRUST BLOCKING SHALL BE USED ONLY FOR SPECIAL CONDITIONS, SUCH AS, CAPS WHERE THE MAIN WILL BE EXTENDED IN THE FUTURE, OR AS SPECIFICALLY APPROVED BY CITY OF RIO RANCHO. THE DESIGN ENGINEER SHALL BE RESPONSIBLE FOR SIZING ALL CONCRETE THRUST BLOCKING.
5. LIDS SHALL CONFORM TO AMERICAN SOCIETY FOR TESTING AND MATERIALS STANDARD A48, AND BE GRAY IRON CL35B, HEAVY DUTY DESIGN LOAD RATING, WITH ASPHALT DIPPED COATING.
6. VALVES TO BE OPERATED BY CITY UTILITY OPERATIONS STAFF ONLY.
7. VALVE BOXES SHALL BE ADJUSTED TO THE FINISHED GRADE BEFORE PLACING OF ASPHALT CONCRETE SURFACE COURSE.

DATE MODIFIED: OCTOBER 2017

City of Rio Rancho
Department of Public Works

POTABLE WATER VALVE BOX ASSEMBLY

DWG. NO. W-05 APRIL 22, 2016

THIS SHEET NOT TO SCALE

RioRancho City of Vision

No.	DESCRIPTION	DATE	BY
1			
2			
3			
4			
5			
6			
7			

REVISIONS (OR CHANGE NOTICES)

Designed By: CONLEY ENGINEERING LLC 3915 Carlisle Blvd NE Albuquerque, NM 87110 505-331-1587

Designed For: CITY OF RIO RANCHO NEW MEXICO

LISBON AVENUE CULVERT REPLACEMENT

NM APWA AND CORR STANDARD DRAWINGS

NM APWA & CORR STANDARD DRAWINGS

PROJECT NO.	FS1976
DESIGNED BY:	PJC
DRAWN BY:	CE LLC
CHECKED BY:	PJC
DATE MODIFIED:	
DPW CHK:	
SHEET:	19A

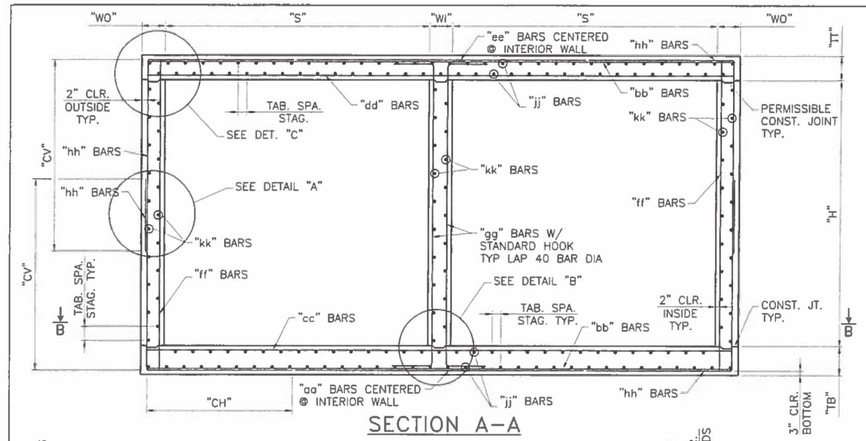

SECTION A–A

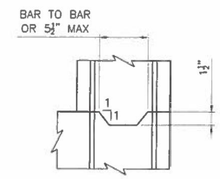

CONSTRUCTION JOINT DETAIL

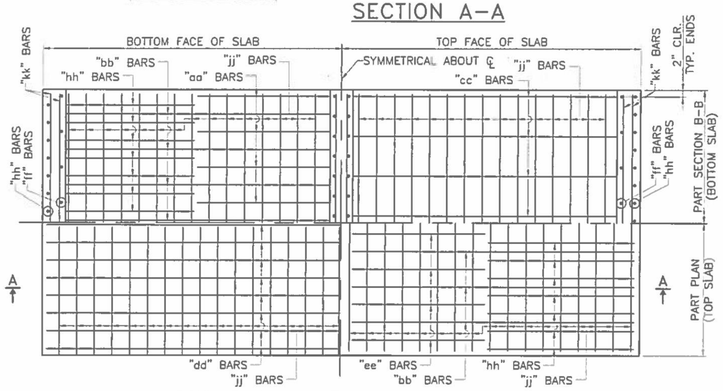

REBAR LAYOUT – PLAN VIEW

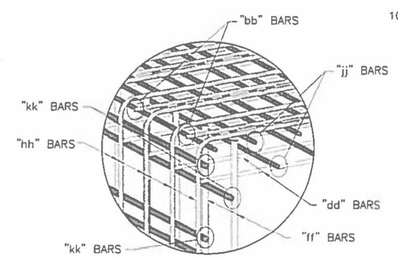

DETAIL "C"
(SIMILAR BOTTOM CORNERS)

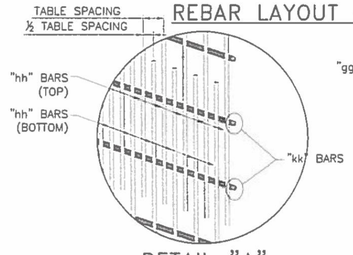

DETAIL "A"
(INSIDE FACE OMITTED FOR CLARITY)

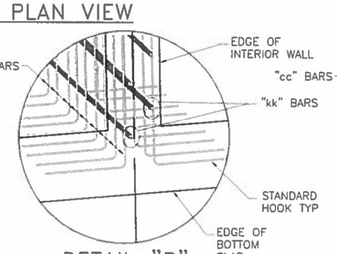

DETAIL "B"
(WALL REINFORCING ONLY)

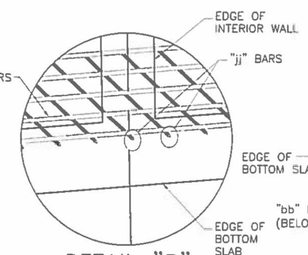

DETAIL "B"
(BOTTOM SLAB – TOP MAT)

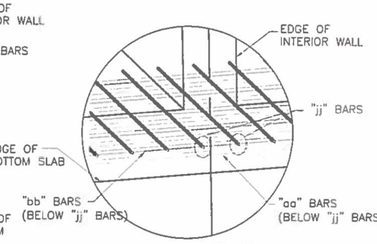

DETAIL "B"
(BOTTOM SLAB – BOTTOM MAT)

GENERAL NOTES

1. ALL MATERIALS AND WORKMANSHIP SHALL CONFORM TO THE NEW MEXICO DEPARTMENT OF TRANSPORTATION SPECIFICATIONS FOR HIGHWAY AND BRIDGE CONSTRUCTION (CURRENT EDITION) WITH APPLICABLE SPECIAL PROVISIONS.
2. ALL CONCRETE SHALL BE CLASS "AA" (4000 psi). CHAMFER ALL EXPOSED EDGES ¾".
3. ALL REINFORCING STEEL TO BE DEFORMED BARS, CONFORMING TO AASHTO M–31, GRADE 60. ALL DIMENSIONS REFER TO THE CENTERLINE OF BAR.
4. "COVER" IS HEIGHT OF FILL FROM TOP OF BOX TO THE TOP OF PAVEMENT. ORIGINAL HEIGHT OF COVER MAY NOT BE EXCEEDED IN THE FUTURE OR WILL REQUIRE REMOVAL AND REPLACEMENT WITH PROPER DESIGN FILL CBC. IN CASE OF COVER EQUAL TO 10', 15', 20', OR 25' USE HIGHER DESIGN FILL IN CASE OF FUTURE AC OVERLAY.
5. "jj" AND "kk" BARS MAY BE SPLICED WHEN NECESSARY BY LAPPING AT LEAST 40 BAR DIAMETERS. NO OTHER SPLICING OF BARS WILL BE PERMITTED. LENGTH OF THESE BARS SHALL EQUAL THE LENGTH OF BARREL "L" PLUS (2 X "HW") MINUS 4" FOR TOTAL NEW CONSTRUCTION, NOT INCLUDING LAP LENGTH. FOR CULVERT EXTENSION, LENGTH OF THESE BARS SHALL BE "L" PLUS "HW" MINUS 2".
6. REINFORCING SHOWN IS FOR PLACEMENT LOCATION ONLY. USE APPROPRIATE SHEETS AND CORRESPONDING TABLES TO DETERMINE THE REINFORCING REQUIREMENTS AND SPACINGS.
7. ALL CONSTRUCTION JOINTS SHALL BE AS PER DETAIL THIS SHEET. CONSTRUCTION JOINTS ARE PERMISSIBLE AND SHALL BE BE LOCATED AT WALL/SLAB HORIZONTAL INTERFACE.
8. DO NOT BACKFILL WALLS UNTIL TOP SLAB HAS REACHED 4000 psi DESIGN STRENGTH.
9. CBC'S SHALL BE CONSTRUCTED TO THE SPAN, HEIGHT, NUMBER OF BARRELS, SKEW, ALIGNMENT, AND FLOWLINE GRADE AS SPECIFIED ON THE PLAN AND PROFILE AND STRUCTURE PLACEMENT SECTIONS.
10. EXCAVATION AND BACKFILL OF CBC'S SHALL BE IN ACCORDANCE WITH STANDARD DRAWING 210–01–1/1.

DESIGN

DESIGNED IN ACCORDANCE WITH AASHTO LRFD BRIDGE DESIGN SPECIFICATIONS, THIRD EDITION.

PAYMENT

PAYMENT FOR CBC'S IS BASED ON "LIN. FT." UNIT OF MEASUREMENT FOR THE TOTAL LENGTH OF ALL NEW BARRELS CONSTRUCTED AT THE CENTERLINE OF BARREL. I.E. SINGLE BARREL SHALL BE 1 X "L" AND TRIPLE BARREL SHALL BE 3 X "L" FOR PAYMENT. LENGTH OF BARREL SHALL NOT INCLUDE "HW" WHICH SHALL BE PAID FOR SEPARATELY. CONCRETE, REBAR, FORMING, AND OTHER WORK AND MATERIAL SHALL BE INCLUDED IN THE LIN. FT. COST FOR THE CBC AND NO FURTHER PAYMENT SHALL BE MADE FOR THESE INCIDENTAL ITEMS.

ALTERNATIVELY, A COMPLETE CONCRETE BOX CULVERT MAY BE PAID FOR UNDER CLASS "AA" CONCRETE BY "CU. YD." ITEM 511030 AND GRADE 60 REBAR BY "LBS." ITEM 540060.

NO.	DATE	REV. BY	DESCRIPTION

REVISIONS (OR CHANGE NOTICES)

NEW MEXICO
DEPARTMENT OF TRANSPORTATION
STANDARD DRAWING

CONCRETE BOX CULVERT DOUBLE OPENING – DESIGN FILL "A" 0–10 FT
STRUCTURAL SECTIONS AND REBAR

APPROVED _____ DESIGN ENGINEER _____ DATE 3/30/16

DESIGNED BY TLB DRAWN BY SOC CHECKED BY HDR

511–62–1/2 1 OF 2

Sheet 511-86

PAYMENT NOTE: PAYMENT NOTE ON THIS NMDOT STD DWG DOES NOT APPLY. PAYMENT WILL BE PAID BY THE CUBIC YARD OF COMPLETE AND IN-PLACE RPCC. SEE BID DOCUMENTS.

THIS SHEET NOT TO SCALE

RioRancho City of Vision

No.	DESCRIPTION	DATE	BY
1			
2			
3			
4			
5			
6			
7			

REVISIONS (OR CHANGE NOTICES)

Designed By: CONLEY ENGINEERING LLC
3915 Carlisle Blvd NE Albuquerque, NM 87110 505-331-1587

Designed For: CITY OF RIO RANCHO NEW MEXICO

LISBON AVENUE CULVERT REPLACEMENT

NMDOT STD DWG 511-62-1/ 2

NMDOT STANDARD DRAWING

PROJECT NO. FS1976
DESIGNED BY: --
DRAWN BY: --
CHECKED BY: --
DATE MODIFIED: --
DPW CHK: --
SHEET: 20

DOUBLE OPENING BOX CULVERT STRUCTURE DIMENSIONS						GRADE 60 REINFORCING BAR SCHEDULE (BAR SIZE, SPACING AND LENGTH DIMENSIONS)																											
DIM		0–10 FT BURIAL DESIGN FILL "A"				"aa"		"ee"		"aa" & "ee"		"bb"		"cc"		"dd"		"bb" & "cc", & "dd"	"ff"		"gg"		"ff" & "gg" **	"hh"				"jj"		"kk"	
SPAN "S" INSIDE	HEIGHT "H" INSIDE	TOP SLAB "TT"	BOTTOM SLAB "TB"	WALLS OUTER "WO"	WALLS INTERIOR "WI"	SIZE	SPACING	SIZE	SPACING	LENGTH	NUMBER OF BARS	SIZE	SPACING	SIZE	SPACING	SIZE	SPACING	LENGTH	SIZE	SPACING	SIZE	SPACING	LENGTH	SIZE	SPACING	"CH" LENGTH	"CV" LENGTH	SIZE	STAGGERED SPACING	SIZE	STAGGERED SPACING
4'	2'	7.5"	8.5"	7.5"	6.0"	#4	12"	#5	12"	5'–0"	1	#5	12"	#4	6"	#4	6"	9'–5"	#4	6"	#4	12"	2'–11"	#4	6"	24"	25"	#4	6"	#4	6"
4'	3'	7.5"	8.5"	7.5"	6.0"	#4	12"	#5	12"	5'–0"	1	#5	12"	#4	6"	#4	6"	9'–5"	#4	6"	#4	12"	3'–11"	#4	6"	24"	31"	#4	6"	#4	6"
4'	4'	7.5"	8.5"	7.5"	6.0"	#4	12"	#5	12"	5'–0"	1	#5	12"	#4	6"	#4	6"	9'–5"	#4	6"	#4	12"	4'–11"	#4	6"	24"	37"	#4	6"	#4	6"
6'	2'	8.0"	8.5"	7.5"	6.0"	#5	12"	#7	12"	7'–5"	1	#7	12"	#6	6"	#5	6"	13'–5"	#5	6"	#4	12"	2'–11"	#5	6"	30"	27"	#4	6"	#4	6"
6'	3'	8.0"	8.5"	7.5"	6.0"	#5	12"	#7	12"	7'–5"	1	#7	12"	#6	6"	#5	6"	13'–5"	#5	6"	#4	12"	3'–11"	#5	6"	30"	33"	#4	6"	#4	6"
6'	4'	8.0"	8.5"	7.5"	6.0"	#5	12"	#7	12"	7'–5"	1	#7	12"	#6	6"	#5	6"	13'–5"	#5	6"	#4	12"	4'–11"	#5	6"	30"	39"	#4	6"	#4	6"
6'	5'	8.0"	8.5"	7.5"	6.0"	#5	12"	#7	12"	7'–5"	1	#7	12"	#6	6"	#5	6"	13'–5"	#5	6"	#4	12"	5'–11"	#5	6"	30"	45"	#4	6"	#4	6"
6'	6'	8.0"	8.5"	7.5"	6.0"	#5	12"	#7	12"	7'–5"	1	#7	12"	#6	6"	#5	6"	13'–5"	#5	6"	#4	12"	6'–11"	#5	6"	30"	51"	#4	6"	#4	6"
6'	7'	8.0"	8.5"	7.5"	6.0"	#5	12"	#7	12"	7'–5"	1	#7	12"	#6	6"	#5	6"	13'–5"	#5	6"	#4	12"	7'–11"	#5	6"	30"	57"	#4	6"	#4	6"
8'	4'	9.5"	9.0"	7.5"	6.0"	#7	12"	#7	12"	8'–5"	1	#7	12"	#5	6"	#5	6"	17'–5"	#5	6"	#4	12"	5'–1"	#6	6"	36"	41"	#4	6"	#4	6"
8'	5'	9.5"	9.0"	7.5"	6.0"	#7	12"	#7	12"	8'–5"	1	#7	12"	#5	6"	#5	6"	17'–5"	#5	6"	#4	12"	6'–1"	#6	6"	36"	47"	#4	6"	#4	6"
8'	6'	9.5"	9.0"	7.5"	6.0"	#7	12"	#7	12"	8'–5"	1	#7	12"	#5	6"	#5	6"	17'–5"	#5	6"	#4	12"	7'–1"	#6	6"	36"	53"	#4	6"	#4	6"
8'	7'	9.5"	9.0"	7.5"	6.0"	#7	12"	#7	12"	8'–5"	1	#7	12"	#5	6"	#5	6"	17'–5"	#5	6"	#4	12"	8'–1"	#6	6"	36"	59"	#4	6"	#4	6"
8'	8'	9.5"	9.0"	7.5"	6.0"	#7	12"	#7	12"	8'–5"	1	#7	12"	#5	6"	#5	6"	17'–5"	#5	6"	#4	12"	9'–1"	#6	6"	36"	65"	#4	6"	#4	6"
10'	3'	11.0"	10.5"	7.5"	6.0"	#8	12"	#7	12"	10'–9"	1	#8	12"	#6	6"	#6	6"	21'–5"	#6	6"	#4	12"	4'–4"	#6	6"	38"	37"	#4	6"	#4	6"
10'	4'	11.0"	10.5"	7.5"	6.0"	#8	12"	#7	12"	10'–9"	1	#8	12"	#6	6"	#6	6"	21'–5"	#6	6"	#4	12"	5'–4"	#6	6"	38"	43"	#4	6"	#4	6"
10'	5'	11.0"	10.5"	7.5"	6.0"	#8	12"	#7	12"	10'–9"	1	#8	12"	#6	6"	#6	6"	21'–5"	#6	6"	#4	12"	6'–4"	#6	6"	38"	49"	#4	6"	#4	6"
10'	6'	11.0"	10.5"	7.5"	6.0"	#8	12"	#7	12"	10'–9"	1	#8	12"	#6	6"	#6	6"	21'–5"	#6	6"	#4	12"	7'–4"	#6	6"	38"	55"	#4	6"	#4	6"
10'	7'	11.0"	10.5"	7.5"	6.0"	#8	12"	#7	12"	10'–9"	1	#8	12"	#6	6"	#6	6"	21'–5"	#6	6"	#4	12"	8'–4"	#6	6"	38"	61"	#4	6"	#4	6"
10'	8'	11.0"	10.5"	9.0"	6.0"	#8	12"	#7	12"	10'–10"	1	#8	12"	#6	6"	#6	6"	21'–8"	#6	6"	#4	12"	9'–4"	#7	6"	45"	69"	#4	6"	#4	6"
10'	9'	11.0"	10.5"	9.0"	6.0"	#8	12"	#7	12"	10'–10"	1	#8	12"	#6	6"	#6	6"	21'–8"	#6	6"	#4	12"	10'–4"	#7	6"	45"	75"	#4	6"	#4	6"
10'	10'	11.0"	10.5"	9.0"	6.0"	#8	12"	#7	12"	10'–10"	1	#8	12"	#6	6"	#6	6"	21'–8"	#6	6"	#4	12"	11'–4"	#7	6"	45"	81"	#4	6"	#4	6"
10'	11'	11.0"	10.5"	9.0"	6.0"	#8	12"	#7	12"	10'–10"	1	#8	12"	#6	6"	#6	6"	21'–8"	#6	6"	#4	12"	12'–4"	#7	6"	45"	87"	#4	6"	#4	6"
10'	12'	11.0"	10.5"	9.0"	6.0"	#8	12"	#7	12"	10'–10"	1	#8	12"	#6	6"	#6	6"	21'–8"	#6	6"	#4	12"	13'–4"	#7	6"	45"	93"	#4	6"	#4	6"
12'	6'	12.5"	12.0"	9.0"	6.0"	#8	12"	#8	12"	11'–10"	1	#8	12"	#6	6"	#7	6"	25'–8"	#7	6"	#4	12"	7'–7"	#8	6"	55"	63"	#4	6"	#4	6"
12'	7'	12.5"	12.0"	9.0"	6.0"	#8	12"	#8	12"	11'–10"	1	#8	12"	#6	6"	#7	6"	25'–8"	#7	6"	#4	12"	8'–7"	#8	6"	55"	69"	#4	6"	#4	6"
12'	8'	12.5"	12.0"	9.0"	6.0"	#8	12"	#8	12"	11'–10"	1	#8	12"	#6	6"	#7	6"	25'–8"	#7	6"	#4	12"	9'–7"	#8	6"	55"	75"	#4	6"	#4	6"
12'	9'	12.5"	12.0"	9.0"	6.0"	#8	12"	#8	12"	11'–10"	1	#8	12"	#6	6"	#7	6"	25'–8"	#7	6"	#4	12"	10'–7"	#8	6"	55"	81"	#4	6"	#4	6"
* 12'	10'	12.5"	12.0"	9.0"	6.0"	#8	12"	#8	12"	11'–10"	1	#8	12"	#6	6"	#7	6"	25'–8"	#7	6"	#4	12"	11'–7"	#8	6"	55"	87"	#4	6"	#4	6"
12'	12'	12.5"	12.0"	9.0"	6.0"	#8	12"	#8	12"	11'–10"	1	#8	12"	#6	6"	#7	6"	25'–8"	#7	6"	#4	12"	13'–7"	#8	6"	55"	99"	#4	6"	#4	6"
14'	8'	14.0"	13.0"	11.0"	7.0"	#9	12"	#8	12"	14'–4"	1	#9	12"	#7	6"	#7	6"	30'–1"	#7	6"	#5	12"	9'–10"	#8	6"	60"	76"	#4	6"	#4	6"
14'	9'	14.0"	13.0"	11.0"	7.0"	#9	12"	#8	12"	14'–4"	1	#9	12"	#7	6"	#7	6"	30'–1"	#7	6"	#5	12"	10'–10"	#8	6"	60"	82"	#4	6"	#4	6"
14'	10'	14.0"	13.0"	11.0"	7.0"	#9	12"	#8	12"	14'–4"	1	#9	12"	#7	6"	#7	6"	30'–1"	#7	6"	#5	12"	11'–10"	#8	6"	60"	88"	#4	6"	#4	6"
14'	11'	14.0"	13.0"	11.0"	7.0"	#9	12"	#8	12"	14'–4"	1	#9	12"	#7	6"	#7	6"	30'–1"	#7	6"	#5	12"	12'–10"	#8	6"	60"	94"	#4	6"	#4	6"
14'	12'	14.0"	13.0"	11.0"	7.0"	#9	12"	#8	12"	14'–4"	1	#9	12"	#7	6"	#7	6"	30'–1"	#7	6"	#5	12"	13'–10"	#8	6"	60"	100"	#4	6"	#4	6"
14'	13'	14.0"	13.0"	11.0"	7.0"	#9	12"	#8	12"	14'–4"	1	#9	12"	#7	6"	#7	6"	30'–1"	#7	6"	#5	12"	14'–10"	#8	6"	60"	106"	#4	6"	#4	6"
14'	14'	14.0"	13.0"	11.0"	7.0"	#9	12"	#8	12"	14'–4"	1	#9	12"	#7	6"	#7	6"	30'–1"	#7	6"	#5	12"	15'–10"	#8	6"	60"	112"	#4	6"	#4	6"

FOR EXTENSIONS OF EXISTING CBC'S OF S=5', S=7', AND S=9' SIZE SPANS NOT INCLUDED IN THIS TABLE, USE DIMENSIONS FOR NEXT GREATER SPAN TO BUILD. FOR EXAMPLE: FOR S=5' USE DESIGN DIMENSIONS FROM THE TABLE FOR S=6'. ALSO REDUCE THE S=6' TABLE LENGTH OF BARS "bb", "cc" AND "dd" BY ONE FOOT TO ACCOMMODATE THE SHORTER SPAN. SEE DETAILS ON SHEET 511–66–4/6. ANY OTHER SIZES OF BOX EXTENSIONS NOT COVERED BY THIS MODIFICATION SHALL BE DONE THROUGH SPECIAL DESIGNS INCLUDED IN THE PROJECT PLANS.

** TOTAL LENGTH OF "gg" BARS IS TABLE LENGTH PLUS TWO STANDARD 90° HOOKS AND OPTIONAL 40 BAR ø LAP IF NECESSARY.

* EXAMPLE OF USE OF THIS TABLE:
PROPOSED STRUCTURE – DOUBLE BARREL, 12 FT. SPAN/10 FT. HEIGHT, CBC WITH 6 FT. DEPTH OF COVER.
USE THE FOLLOWING BUILD INFORMATION FROM THE TABLE ABOVE:

DIM		0–10 FT BURIAL DESIGN FILL "A"				"aa"		"ee"		"aa" & "ee"		"bb"		"cc"		"dd"		"bb" & "cc", & "dd"	"ff"		"gg"		"ff" & "gg"	"hh"				"jj"		"kk"	
SPAN "S" INSIDE	HEIGHT "H" INSIDE	TOP SLAB "TT"	BOTTOM SLAB "TB"	WALLS OUTER "WO"	WALLS INTERIOR "WI"	SIZE	SPACING	SIZE	SPACING	LENGTH	NUMBER OF BARS	SIZE	SPACING	SIZE	SPACING	SIZE	SPACING	LENGTH	SIZE	SPACING	SIZE	SPACING	LENGTH	SIZE	SPACING	"CH" LENGTH	"CV" LENGTH	SIZE	STAGGERED SPACING	SIZE	STAGGERED SPACING
12'	10'	12.5"	12.0"	9.0"	6.0"	#8	12"	#8	12"	11'–10"	1	#8	12"	#6	6"	#7	6"	25'–8"	#7	6"	#4	12"	11'–7"	#8	6"	55"	87"	#4	6"	#4	6"

NO.	DATE	REV. BY	DESCRIPTION

REVISIONS (OR CHANGE NOTICES)

NEW MEXICO
DEPARTMENT OF TRANSPORTATION
STANDARD DRAWING

CONCRETE BOX CULVERT DOUBLE OPENING – DESIGN FILL "A" 0–10 FT DIMENSIONS AND REBAR SCHEDULE

APPROVED _____ DESIGN ENGINEER _____ DATE APR 9, 07

DESIGNED BY TLB DRAWN BY SGL CHECKED BY HDR

511–62–2/2 2 OF 2

Sheet 511-87

THIS SHEET NOT TO SCALE

RioRancho City of Vision

No.	DESCRIPTION	DATE	BY
7			
6			
5			
4			
3			
2			
1			

REVISIONS (OR CHANGE NOTICES)

Designed By: CONLEY ENGINEERING LLC
3915 Coronado Blvd NE Albuquerque, NM 87110 505-331-1587

Designed For: CITY OF RIO RANCHO NEW MEXICO

LISBON AVENUE CULVERT REPLACEMENT

NMDOT STD DWG 511-62-2 / 2

NMDOT STANDARD DRAWING

PROJECT NO. FS1976
DESIGNED BY: --
DRAWN BY: --
CHECKED BY: --
DATE MODIFIED: --
DPW CHK: --
SHEET: 21

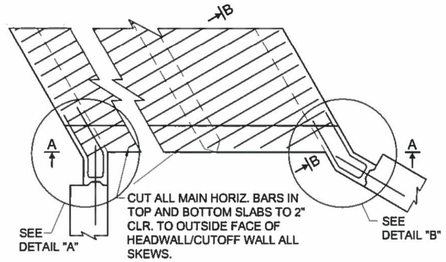

PLAN

(SKEWED)
SIMILAR FOR SINGLE BARREL
(NOT TO BE USED FOR SKEWS OVER 45°)

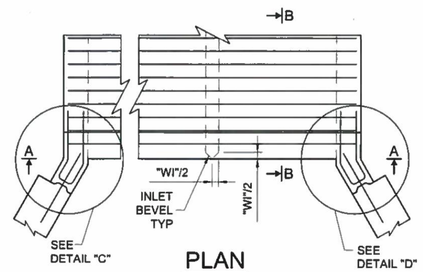

PLAN

(NORMAL)
SIMILAR FOR SINGLE BARREL

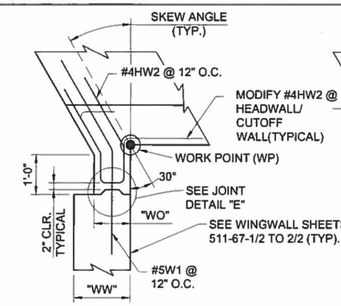

DETAIL "A"

(SKEWED)

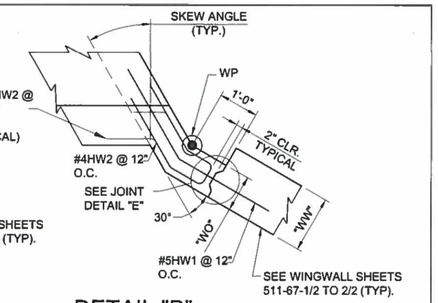

DETAIL "B"

(SKEWED)

NOTE: SEE SHEET 511-66-2/6 FOR BAR SIZES, NUMBER OF BARS, AND BAR LENGTH FORMULAS.

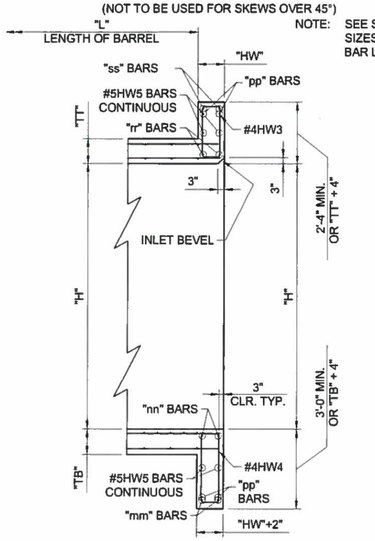

PART SECTION B-B

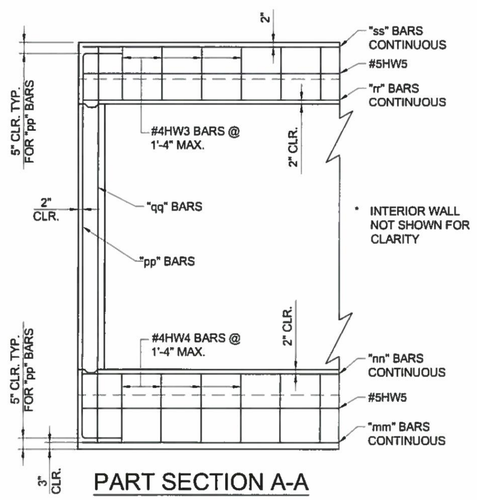

* INTERIOR WALL NOT SHOWN FOR CLARITY

PART SECTION A-A

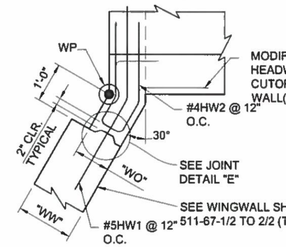

DETAIL "C"

(NORMAL)

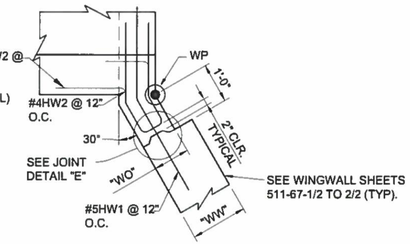

DETAIL "D"

(NORMAL)

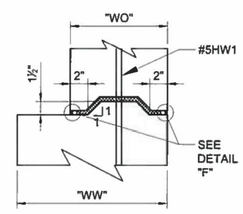

JOINT DETAIL "E"

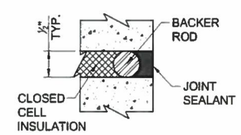

DETAIL "F"

NOTE: DETAILS "A", "B", "C", & "D" EXTEND FULL HEIGHT FROM TOP OF PARAPET TO BOTTOM OF CUTOFF WALL. THESE EXTENSIONS SHALL BE CAST INTEGRALLY WITH HEADWALL/CUTOFF WALL (NO CONSTRUCTION JOINT). ELEVATION AT EXTENSION SHALL BE EQUAL TO PARAPET.

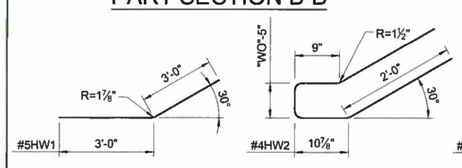

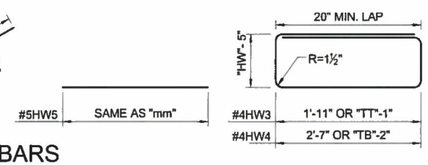

REINFORCING BARS

PAYMENT

PAYMENT FOR HEADWALL/CUTOFF WALL IS BASED ON "EACH" UNIT OF MEASUREMENT FOR EACH NEW BARREL CONSTRUCTED. IN CASE OF TYPE II CONNECTION EACH HEADWALL/CUTOFF WALL UNIT SHALL BE PAID FOR, I.E. TWO PER CULVERT EXTENSION.

ALTERNATIVELY, A COMPLETE CONCRETE BOX CULVERT MAY BE PAID FOR UNDER CLASS "AA" CONCRETE BY "CU.YD." ITEM 511030 AND GRADE 60 REBAR BY "LBS." ITEM 540060.

NO.	DATE	REV. BY	DESCRIPTION

REVISIONS (OR CHANGE NOTICES)

NEW MEXICO
DEPARTMENT OF TRANSPORTATION
STANDARD DRAWING

CBC HEAD/CUTOFF WALLS - ALL
DESIGN FILLS-0° 15° 30° 45° SKEWS
STRUCTURAL SECTIONS AND REBAR

APPROVED _____ DESIGN ENGINEER 4/19/18 DATE

DESIGNED BY TLB DRAWN BY SGL CHECKED BY HDR

511-66-1/6 1 OF 6

Sheet 511-96

PAYMENT NOTE: PAYMENT NOTE ON THIS NMDOT STD DWG DOES NOT APPLY. PAYMENT WILL BE PAID BY THE CUBIC YARD OF COMPLETE AND IN-PLACE RPCC. SEE BID DOCUMENTS.

THIS SHEET NOT TO SCALE

RioRancho City of Vision

No.	DESCRIPTION	DATE	BY
1			
2			
3			
4			
5			
6			
7			

REVISIONS (OR CHANGE NOTICES)

Designed By: CONLEY ENGINEERING LLC
3915 Carlisle Blvd NE Albuquerque, NM 87110 505-331-1587

Designed For: CITY OF RIO RANCHO NEW MEXICO

LISBON AVENUE CULVERT REPLACEMENT

NMDOT STD DWG 511-66-1/ 6

NMDOT STANDARD DRAWING

PROJECT NO. FS1976
DESIGNED BY: --
DRAWN BY: --
CHECKED BY: --
DATE MODIFIED: --
DPW CHK: --
SHEET: 22

BOX CULVERT NOMINAL DIMENSIONS		HEADWALL AND CUTOFF WALL DIMENSION & GRADE 60 REINFORCING BAR SCHEDULE (BAR SIZE AND NUMBER OF BARS REQUIRED)											
		0 DEGREE SKEW											
			"mm"		"nn"		"pp"		"qq"		"rr"		"ss"
SPAN "S" INSIDE	HEIGHT "H" INSIDE	WIDTH HEAD WALL "HW"	SIZE	NUMBER OF BARS	SIZE	NUMBER OF BARS	SIZE	NUMBER OF BARS	SIZE	NUMBER OF BARS	SIZE	NUMBER OF BARS	SIZE	NUMBER OF BARS
4'	2'	12"	#7	2	#7	2	#7	2	#4	2	#7	2	#7	2
4'	3'	12"	#7	2	#7	2	#7	2	#4	2	#7	2	#7	2
4'	4'	12"	#7	2	#7	2	#7	2	#4	2	#7	2	#7	2
6'	2'	12"	#7	2	#7	2	#7	2	#4	2	#7	2	#7	2
6'	3'	12"	#7	2	#7	2	#7	2	#4	2	#7	2	#7	2
6'	4'	12"	#7	2	#7	2	#7	2	#4	2	#7	2	#7	2
6'	5'	12"	#7	2	#7	2	#7	2	#4	2	#7	2	#7	2
6'	6'	12"	#7	2	#7	2	#7	2	#4	2	#7	2	#7	2
6'	7'	12"	#7	2	#7	2	#7	2	#4	2	#7	2	#7	2
8'	4'	12"	#7	2	#7	2	#7	2	#4	2	#7	2	#7	2
8'	5'	12"	#7	2	#7	2	#7	2	#4	2	#7	2	#7	2
8'	6'	12"	#7	2	#7	2	#7	2	#4	2	#7	2	#7	2
8'	7'	12"	#7	2	#7	2	#7	2	#4	2	#7	2	#7	2
8'	8'	12"	#7	2	#7	2	#7	2	#4	2	#7	2	#7	2
10'	3'	12"	#7	2	#7	2	#7	2	#4	2	#7	2	#7	2
10'	4'	12"	#7	2	#7	2	#7	2	#4	2	#7	2	#7	2
10'	5'	12"	#7	2	#7	2	#7	2	#4	2	#7	2	#7	2
10'	6'	12"	#7	2	#7	2	#7	2	#4	2	#7	2	#7	2
10'	7'	12"	#7	2	#7	2	#7	2	#4	2	#7	2	#7	2
10'	8'	12"	#7	2	#7	2	#7	2	#4	2	#7	2	#7	2
10'	9'	12"	#7	2	#7	2	#7	2	#4	2	#7	2	#7	2
10'	10'	12"	#7	2	#7	2	#7	2	#4	2	#7	2	#7	2
10'	11'	12"	#7	2	#7	2	#7	2	#4	2	#7	2	#7	2
10'	12'	12"	#7	2	#7	2	#7	2	#4	2	#7	2	#7	2
12'	6'	12"	#7	2	#7	2	#7	2	#4	2	#7	2	#7	2
12'	7'	12"	#7	2	#7	2	#7	2	#4	2	#7	2	#7	2
12'	8'	12"	#7	2	#7	2	#7	2	#4	2	#7	2	#7	2
12'	9'	12"	#7	2	#7	2	#7	2	#4	2	#7	2	#7	2
* 12'	10'	12"	#7	2	#7	2	#7	2	#4	2	#7	2	#7	2
12'	12'	12"	#7	2	#7	2	#7	2	#4	2	#7	2	#7	2
14'	8'	12"	#7	2	#7	2	#7	2	#4	2	#7	2	#7	2
14'	9'	12"	#7	2	#7	2	#7	2	#4	2	#7	2	#7	2
14'	10'	12"	#7	2	#7	2	#7	2	#4	2	#7	2	#7	2
14'	11'	12"	#7	2	#7	2	#7	2	#4	2	#7	2	#7	2
14'	12'	12"	#7	2	#7	2	#7	2	#4	2	#7	2	#7	2
14'	13'	12"	#7	2	#7	2	#7	2	#4	2	#7	2	#7	2
14'	14'	12"	#7	2	#7	2	#7	2	#4	2	#7	2	#7	2

BOX CULVERT NOMINAL DIMENSIONS		HEADWALL AND CUTOFF WALL DIMENSION & GRADE 60 REINFORCING BAR SCHEDULE (BAR SIZE AND NUMBER OF BARS REQUIRED)											
		15 DEGREE SKEW											
			"mm"		"nn"		"pp"		"qq"		"rr"		"ss"
SPAN "S" INSIDE	HEIGHT "H" INSIDE	WIDTH HEAD WALL "HW"	SIZE	NUMBER OF BARS	SIZE	NUMBER OF BARS	SIZE	NUMBER OF BARS	SIZE	NUMBER OF BARS	SIZE	NUMBER OF BARS	SIZE	NUMBER OF BARS
4'	2'	12"	#7	2	#7	2	#7	2	#4	2	#7	2	#7	2
4'	3'	12"	#7	2	#7	2	#7	2	#4	2	#7	2	#7	2
4'	4'	12"	#7	2	#7	2	#7	2	#4	2	#7	2	#7	2
6'	2'	12"	#7	2	#7	2	#7	2	#4	2	#7	2	#7	2
6'	3'	12"	#7	2	#7	2	#7	2	#4	2	#7	2	#7	2
6'	4'	12"	#7	2	#7	2	#7	2	#4	2	#7	2	#7	2
6'	5'	12"	#7	2	#7	2	#7	2	#4	2	#7	2	#7	2
6'	6'	12"	#7	2	#7	2	#7	2	#4	2	#7	2	#7	2
6'	7'	12"	#7	2	#7	2	#7	2	#4	2	#7	2	#7	2
8'	4'	12"	#9	2	#9	2	#7	2	#4	2	#8	2	#8	2
8'	5'	12"	#9	2	#9	2	#7	2	#4	2	#8	2	#8	2
8'	6'	12"	#9	2	#9	2	#7	2	#4	2	#8	2	#8	2
8'	7'	12"	#9	2	#9	2	#7	2	#4	2	#8	2	#8	2
8'	8'	12"	#9	2	#9	2	#7	2	#4	2	#8	2	#8	2
10'	3'	12"	#10	2	#10	2	#8	2	#5	2	#10	2	#9	2
10'	4'	12"	#10	2	#10	2	#8	2	#5	2	#10	2	#9	2
10'	5'	12"	#10	2	#10	2	#8	2	#5	2	#10	2	#9	2
10'	6'	12"	#10	2	#10	2	#8	2	#5	2	#10	2	#9	2
10'	7'	12"	#10	2	#10	2	#8	2	#5	2	#10	2	#9	2
10'	8'	12"	#10	2	#10	2	#8	2	#5	2	#10	2	#9	2
10'	9'	12"	#10	2	#10	2	#8	2	#5	2	#10	2	#9	2
10'	10'	12"	#10	2	#10	2	#8	2	#5	2	#10	2	#9	2
10'	11'	12"	#10	2	#10	2	#8	2	#5	2	#10	2	#9	2
10'	12'	12"	#10	2	#10	2	#8	2	#5	2	#10	2	#9	2
12'	6'	14"	#11	3	#10	3	#11	2	#6	2	#11	3	#10	3
12'	7'	14"	#11	3	#10	3	#11	2	#6	2	#11	3	#10	3
12'	8'	14"	#11	3	#10	3	#11	2	#6	2	#11	3	#10	3
12'	9'	14"	#11	3	#10	3	#11	2	#6	2	#11	3	#10	3
* 12'	10'	14"	#11	3	#10	3	#11	2	#6	2	#11	3	#10	3
12'	12'	14"	#11	3	#10	3	#11	2	#6	2	#11	3	#10	3
14'	8'	24"	#11	4	#11	4	#10	3	#8	3	#11	4	#10	4
14'	9'	24"	#11	4	#11	4	#10	3	#8	3	#11	4	#10	4
14'	10'	24"	#11	4	#11	4	#10	3	#8	3	#11	4	#10	4
14'	11'	24"	#11	4	#11	4	#10	3	#8	3	#11	4	#10	4
14'	12'	24"	#11	4	#11	4	#10	3	#8	3	#11	4	#10	4
14'	13'	24"	#11	4	#11	4	#10	3	#8	3	#11	4	#10	4
14'	14'	24"	#11	4	#11	4	#10	3	#8	3	#11	4	#10	4

BOX CULVERT NOMINAL DIMENSIONS		HEADWALL AND CUTOFF WALL DIMENSION & GRADE 60 REINFORCING BAR SCHEDULE (BAR SIZE AND NUMBER OF BARS REQUIRED)											
		30 DEGREE SKEW											
			"mm"		"nn"		"pp"		"qq"		"rr"		"ss"
SPAN "S" INSIDE	HEIGHT "H" INSIDE	WIDTH HEAD WALL "HW"	SIZE	NUMBER OF BARS	SIZE	NUMBER OF BARS	SIZE	NUMBER OF BARS	SIZE	NUMBER OF BARS	SIZE	NUMBER OF BARS	SIZE	NUMBER OF BARS
4'	2'	12"	#7	2	#7	2	#7	2	#4	2	#7	2	#7	2
4'	3'	12"	#7	2	#7	2	#7	2	#4	2	#7	2	#7	2
4'	4'	12"	#7	2	#7	2	#7	2	#4	2	#7	2	#7	2
6'	2'	12"	#8	2	#8	2	#7	2	#4	2	#8	2	#7	2
6'	3'	12"	#8	2	#8	2	#7	2	#4	2	#8	2	#7	2
6'	4'	12"	#8	2	#8	2	#7	2	#4	2	#8	2	#7	2
6'	5'	12"	#8	2	#8	2	#7	2	#4	2	#8	2	#7	2
6'	6'	12"	#8	2	#8	2	#7	2	#4	2	#8	2	#7	2
6'	7'	12"	#8	2	#8	2	#7	2	#4	2	#8	2	#7	2
8'	4'	12"	#10	2	#10	2	#7	2	#4	2	#10	2	#9	2
8'	5'	12"	#10	2	#10	2	#7	2	#4	2	#10	2	#9	2
8'	6'	12"	#10	2	#10	2	#7	2	#4	2	#10	2	#9	2
8'	7'	12"	#10	2	#10	2	#7	2	#4	2	#10	2	#9	2
8'	8'	12"	#10	2	#10	2	#7	2	#4	2	#10	2	#9	2
10'	3'	14"	#11	3	#11	3	#9	2	#6	2	#11	3	#11	3
10'	4'	14"	#11	3	#11	3	#9	2	#6	2	#11	3	#11	3
10'	5'	14"	#11	3	#11	3	#9	2	#6	2	#11	3	#11	3
10'	6'	14"	#11	3	#11	3	#9	2	#6	2	#11	3	#11	3
10'	7'	14"	#11	3	#11	3	#9	2	#6	2	#11	3	#11	3
10'	8'	14"	#11	3	#11	3	#9	2	#6	2	#11	3	#11	3
10'	9'	14"	#11	3	#11	3	#9	2	#6	2	#11	3	#11	3
10'	10'	14"	#11	3	#11	3	#9	2	#6	2	#11	3	#11	3
10'	11'	14"	#11	3	#11	3	#9	2	#6	2	#11	3	#11	3
10'	12'	14"	#11	3	#11	3	#9	2	#6	2	#11	3	#11	3
12'	6'	24"	#11	3	#11	3	#11	2	#6	2	#11	3	#9	3
12'	7'	24"	#11	3	#11	3	#11	2	#6	2	#11	3	#9	3
12'	8'	24"	#11	3	#11	3	#11	2	#6	2	#11	3	#9	3
12'	9'	24"	#11	3	#11	3	#11	2	#6	2	#11	3	#9	3
* 12'	10'	24"	#11	3	#11	3	#11	2	#6	2	#11	3	#9	3
12'	12'	24"	#11	3	#11	3	#11	2	#6	2	#11	3	#9	3
14'	8'	36"	#11	9	#11	9	#9	8	#6	8	#11	9	#11	9
14'	9'	36"	#11	9	#11	9	#9	8	#6	8	#11	9	#11	9
14'	10'	36"	#11	9	#11	9	#9	8	#6	8	#11	9	#11	9
14'	11'	36"	#11	9	#11	9	#9	8	#6	8	#11	9	#11	9
14'	12'	36"	#11	9	#11	9	#9	8	#6	8	#11	9	#11	9
14'	13'	36"	#11	9	#11	9	#9	8	#6	8	#11	9	#11	9
14'	14'	36"	#11	9	#11	9	#9	8	#6	8	#11	9	#11	9

BOX CULVERT NOMINAL DIMENSIONS		HEADWALL AND CUTOFF WALL DIMENSION & GRADE 60 REINFORCING BAR SCHEDULE (BAR SIZE AND NUMBER OF BARS REQUIRED)											
		45 DEGREE SKEW											
			"mm"		"nn"		"pp"		"qq"		"rr"		"ss"
SPAN "S" INSIDE	HEIGHT "H" INSIDE	WIDTH HEAD WALL "HW"	SIZE	NUMBER OF BARS	SIZE	NUMBER OF BARS	SIZE	NUMBER OF BARS	SIZE	NUMBER OF BARS	SIZE	NUMBER OF BARS	SIZE	NUMBER OF BARS
4'	2'	12"	#7	2	#7	2	#7	2	#4	2	#7	2	#7	2
4'	3'	12"	#7	2	#7	2	#7	2	#4	2	#7	2	#7	2
4'	4'	12"	#7	2	#7	2	#7	2	#4	2	#7	2	#7	2
6'	2'	12"	#10	2	#10	2	#7	2	#4	2	#9	2	#8	2
6'	3'	12"	#10	2	#10	2	#7	2	#4	2	#9	2	#8	2
6'	4'	12"	#10	2	#10	2	#7	2	#4	2	#9	2	#8	2
6'	5'	12"	#10	2	#10	2	#7	2	#4	2	#9	2	#8	2
6'	6'	12"	#10	2	#10	2	#7	2	#4	2	#9	2	#8	2
6'	7'	12"	#10	2	#10	2	#7	2	#4	2	#9	2	#8	2
8'	4'	14"	#11	3	#11	3	#9	2	#5	2	#11	3	#11	3
8'	5'	14"	#11	3	#11	3	#9	2	#5	2	#11	3	#11	3
8'	6'	14"	#11	3	#11	3	#9	2	#5	2	#11	3	#11	3
8'	7'	14"	#11	3	#11	3	#9	2	#5	2	#11	3	#11	3
8'	8'	14"	#11	3	#11	3	#9	2	#5	2	#11	3	#11	3
10'	3'	24"	#11	3	#11	3	#11	2	#5	2	#11	3	#11	3
10'	4'	24"	#11	3	#11	3	#11	2	#6	2	#11	3	#11	3
10'	5'	24"	#11	3	#11	3	#11	2	#6	2	#11	3	#11	3
10'	6'	24"	#11	3	#11	3	#11	2	#6	2	#11	3	#11	3
10'	7'	24"	#11	3	#11	3	#11	2	#6	2	#11	3	#11	3
10'	8'	24"	#11	3	#11	3	#11	2	#6	2	#11	3	#11	3
10'	9'	24"	#11	3	#11	3	#11	2	#6	2	#11	3	#11	3
10'	10'	24"	#11	3	#11	3	#11	2	#6	2	#11	3	#11	3
10'	11'	24"	#11	3	#11	3	#11	2	#6	2	#11	3	#11	3
10'	12'	24"	#11	3	#11	3	#11	2	#6	2	#11	3	#11	3
12'	6'	48"	#11	12	#11	12	#8	11	#5	11	#11	12	#11	12
12'	7'	48"	#11	12	#11	12	#8	11	#5	11	#11	12	#11	12
12'	8'	48"	#11	12	#11	12	#8	11	#5	11	#11	12	#11	12
12'	9'	48"	#11	12	#11	12	#8	11	#5	11	#11	12	#11	12
* 12'	10'	48"	#11	12	#11	12	#8	11	#5	11	#11	12	#11	12
12'	12'	48"	#11	12	#11	12	#8	11	#5	11	#11	12	#11	12
14'	8'	48"	#11	12	#11	12	#8	11	#5	11	#11	12	#11	12
14'	9'	48"	#11	12	#11	12	#8	11	#5	11	#11	12	#11	12
14'	10'	48"	#11	12	#11	12	#8	11	#5	11	#11	12	#11	12
14'	11'	48"	#11	12	#11	12	#8	11	#5	11	#11	12	#11	12
14'	12'	48"	#11	12	#11	12	#8	11	#5	11	#11	12	#11	12
14'	13'	48"	#11	12	#11	12	#8	11	#5	11	#11	12	#11	12
14'	14'	48"	#11	12	#11	12	#8	11	#5	11	#11	12	#11	12

* EXAMPLE OF USE OF THIS TABLE:
PROPOSED STRUCTURE – DOUBLE BARREL, 12 FT. SPAN/10 FT. HEIGHT, CBC WITH 30° SKEW.
USE THE FOLLOWING BUILD INFORMATION FROM THE TABLE ABOVE:

BOX CULVERT NOMINAL DIMENSIONS		HEADWALL AND CUTOFF WALL DIMENSION GRADE 60 REINFORCING BAR SCHEDULE (BAR SIZE AND NUMBER OF BARS REQUIRED)											
		30 DEGREE SKEW											
			"mm"		"nn"		"pp"		"qq"		"rr"		"ss"
SPAN "S" INSIDE	HEIGHT "H" INSIDE	WIDTH HEAD WALL "HW"	SIZE	NUMBER OF BARS	SIZE	NUMBER OF BARS	SIZE	NUMBER OF BARS	SIZE	NUMBER OF BARS	SIZE	NUMBER OF BARS	SIZE	NUMBER OF BARS
12'	10'	24"	#11	3	#11	3	#11	2	#6	2	#11	3	#9	3

LENGTH OF BARS: THE LENGTH OF "mm", "nn", "rr", "ss", & #5HW5 SHALL BE DETERMINED BY:

LENGTH = [[[("WO"*2)+("S"*N)+["WI"*(N−1)]]/COS(SKEW ANGLE)] −4"
(ROUND DOWN TO NEAREST ½")

THESE BARS SHALL BE FURNISHED IN FULL LENGTHS CALCULATED OR BE MECHANICALLY COUPLED BY DEVICES LISTED ON THE NMDOT APPROVED PRODUCTS LIST.

N = NUMBER OF BARRELS (1, 2, 3, OR 4)

"qq" BAR LENGTH = "H" + 59"

"pp" BAR = ["H"+(5'−4" MIN. OR ("TT"+"TB"+8") IF LARGER)]−10"+ 2*STANDARD HOOK LENGTH

FOR EXTENSIONS OF EXISTING CBC'S OF S=5', S=7', AND S=9' SIZE SPANS NOT INCLUDED IN THIS TABLE, USE DIMENSIONS, BAR SIZES, AND NUMBER OF BARS FOR NEXT GREATER SPAN TO BUILD. FOR EXAMPLE, FOR S=5' USE DIMENSIONS AND BAR DETAILS FROM THE TABLE FOR S=6'. USE S=5' IN FORMULAS TO DETERMINE LENGTH OF BARS "mm", "nn", "ss", "rr", AND #5HW5. ANY OTHER SIZE OF BOX EXTENSIONS NOT COVERED BY THIS MODIFICATION SHALL BE DONE THROUGH SPECIAL DESIGNS INCLUDED IN THE PROJECT PLANS.

NOTE:
THIS TABLE IS FOR USE WITH ONE TO FOUR BARRELS. FOR FIVE OR MORE BARRELS USE COMBINATIONS OF ONE TO FOUR BARRELS REPEATING THIS DESIGN.

NO.	DATE	REV. BY	DESCRIPTION

REVISIONS (OR CHANGE NOTICES)

NEW MEXICO
DEPARTMENT OF TRANSPORTATION
STANDARD DRAWING

CONCRETE BOX CULVERT HEADWALL
ALL DESIGN FILLS–0° 15° 30° 45°
SKEWS DIMS AND REBAR SCHEDULE

APPROVED — DESIGN ENGINEER — DATE APR 9 07

DESIGNED BY TLB DRAWN BY SGL CHECKED BY HDR

511–66–2/6 2 OF 6

Sheet 511-97

THIS SHEET NOT TO SCALE

RioRancho City of Vision

No.	DESCRIPTION	DATE	BY
7			
6			
5			
4			
3			
2			
1			

REVISIONS (OR CHANGE NOTICES)

Designed By: CONLEY ENGINEERING LLC 3915 Coronado Blvd NE Albuquerque, NM 87110 505-331-1587

Designed For: CITY OF RIO RANCHO NEW MEXICO

LISBON AVENUE CULVERT REPLACEMENT

NMDOT STD DWG 511-66-2 / 6

NMDOT STANDARD DRAWING

PROJECT NO. FS1976
DESIGNED BY: --
DRAWN BY: --
CHECKED BY: --
DATE MODIFIED: --
DPW CHK: --
SHEET: 23